UNITED STATES DISTRICT COURT

SOUTHERN DISTRICT OF TEXAS

Request for Quotation

RFQ Number: Amended RFQ CRP BJRS
Request Date: August 9, 2011

To:

Interested Vendors

Special Notes: Under the Service Contract Act (SCA), federal agencies, including the judiciary, must require contractors to pay their employees while performing nonprofessional support services on a federal contract in excess of $2,500.00 a prevailing wage (including salaries and fringe benefits) within the industry at the location where the work is to be performed as determined by the Department of Labor.

Please see attached "Notice to Employees Working on Government Contracts" in accordance to the Clause 3-160 "Service Contract Act of 1965".

For further information please visit www.wdol.gov/index.html

This is a request for Open Market Pricing.

All items should be quoted F.O.B. Destination

Quotes may be faxed or e-mailed to the below listed address by (*08/19/11 12:00 P.M. CST)*
However, hand carried quotes are to be delivered by the same time at (*08/19/11 12:00 P.M. CST)*
Submit a quotation by using the attached quote sheet.

A fixed price award from this RFQ will be made based on the lowest price, technically acceptable offer.

Quotes and questions concerning this RFQ should be addressed to *Damon Barrett* at the US District Court:

Physical Address
515 Rusk Street, Rm. 5008
Houston, Texas 77002

Mailing Address
PO Box 61010
Houston, Texas 77208

Phone: 713/250-5935 Fax: 713/250-5671
Email Address: Damon_Barrett@txs.uscourts.gov

The **delivery address** for this purchase will be:

United States District Court
1133 North Shoreline Blvd
Corpus Christi, TX 78401

“Statement of Work”

1. Description
Provide and integrate a video conference solution and projector into an existing audio/video solution and update the existing AMX programming into a Bankruptcy Courtroom in Corpus Christi, Texas.

1.1 Introduction
The United States Bankruptcy Court in Corpus Christi, Tx is updating the video conference solution and adding a projector to an existing audio/video solution. The current video codec is located in a control room and will be disconnected from this courtroom.

1.2 Purpose
Obtain an outside contractor to provide and install a complete video conference solution and projector in a Bankruptcy Courtroom. Prior experience installing a complete audio/video solution for a U.S. District, Magistrate, Bankruptcy or an equivalent installation to include audio, video, IR emitters, video conferencing, FTR Recorder, and AMX control is preferred.

1.3 Scope

Provide and integrate a projector and video conference solution into an existing audio/video system in a bankruptcy courtroom in Corpus Christi, TX. Quote to include all equipment, cabling, terminations, plates and connectors. Quote should also include updating existing programming of AMX courtroom automation programming.

The video conference should be controlled by the touch panel and configured to allow for two cameras to be seen on the far end (not simultaneously). It should be able to send evidence to the far end as well as multipoint. The cameras will be installed in pockets where there are existing cameras. The old cameras need to be removed, and new wiring will need to be installed to the control rack located in the A/V closet where the Codec will be installed. AMX programming of the video conference will need to be integrated into an existing AMX control system to have full remote control functionality. Audio should integrate into the audio system utilizing the existing microphones and speakers. Video should integrate into existing video system utilizing monitors and projector. ISDN lines will be provided at the A/V rack by the courts. Presets need to be configured for Judge, Witness and Lectern.

The projector should be installed in the projector pocket where new cabling will be required. AMX programming of the projector will need to be integrated into an existing AMX control system to have full remote control functionality. Projector should be connected to the video distribution amplifier as an additional monitor to show evidence at all times. Programming should allow time for cool down before allowing button to re-engage power cycle to on. AMX touch panels should display lamp hours. The distance from the projector pocket to the screen will require a throw lens.

Contractor Provided Equipment:

1	Polycom HDX8000/720 w/Rack Hardware **or Equal**
1	Quad BRI module for HDX8000/720 **or Equal**
2	Polycom Camera for HDX8000/720 **or Equal**
1	Triple NT1 for ISDN termination

Court Provided Equipment

1	Sanyo LNS-T31A Throw Lens **or Equal**
1	Sanyo LNS-T31A Throw Lens

1.4 Contractor Requirements
The contractor must have prior experience installing a complete audio/video solution using IR emitters, video conferencing, FTR Recorder, and AMX .

Contractor must have the following certifications:
AMX, Polycom, and Extron

2. Description of Deliverables
Demonstrate a working audio/video solution approved by the Court, complete with audio/video, video conferencing, teleconferencing, FTR Recorder, AMX control and IR emitters for interpretation and hearing impaired according to requirements by the Court.

Location
United States District Court
1133 N. Shoreline Blvd
Corpus Christi, Tx 78401

Schedule Dates
Work to start no later than _____ and finish no later than _____.

Review and Acceptance
Acceptance based on final walk through and testing upon job completion with USDC COTR, Darren Berglan. Contractor will have five (5) business days to correct any deficiencies.

3.0 Contacts

The following contacts are provided by the court to the vendor:

Contracting Officer (CO)
Marrianne Still (713) 250-5353

Procurement Specialist (PS)
Damon Barrett (713) 250-5935

Contracting Officer's Technical Representative (COTR)
Darren Berglan (713) 250-5435

PURCHASE ORDER TERMS AND CONDITIONS
Provisions and Clauses

I. REQUIRED PROVISIONS AND CLAUSES FOR ALL OPEN MARKET SMALL PURCHASES

1) Provision B-1, Solicitation Provisions Incorporated by Reference (AUG 2004)

This solicitation incorporates one or more solicitation provisions by reference, with the same force and effect as if they were given in full text. Upon request, the contracting officer will make their full text available. The offeror is cautioned that the listed provisions may include blocks that must be completed by the offeror and submitted with its quotation or offer. In lieu of submitting the full text of those provisions, the offeror may identify the provision by paragraph identifier and provide the appropriate information with its quotation or offer. Also, the full text of a solicitation provision may be accessed electronically at this address:
http://www.uscourts.gov/procurement/clauses.htm

2) Clause B-5 Clauses Incorporated by Reference (OCT 2006)

This procurement incorporates one or more clauses by reference, with the same force and effect as if they were given in full text. Upon request, the contracting officer will make their full text available. Also, the full text of a clause may be accessed electronically at this address: http://www.uscourts.gov/procurement/clauses.htm

3) The following clauses are included by reference:

Clause 3-3, Provisions, Clauses, Terms and Conditions - Small Purchases (JAN 2010)

Clause 3-160, Service Contract Act of 1965, as amended (JAN 2003)

Wage Rate Determination

(If estimated cost is over $2,500, attach the Department of Labor wage rate determination here.)

4) Provision 3-5, Taxpayer Identification (JAN 2003)

(a) *Definitions.*
"Common parent," as used in this provision, means that corporate entity that owns or controls an affiliated group of corporations that files its federal income tax returns on a consolidated basis, and of which the offeror is a member.
"Taxpayer Identification (TIN)," as used in this provision, means the number required by the Internal Revenue Service (IRS) to be used by the offeror in reporting income tax and other returns. The TIN may be either a social security number or an employer identification number.
(b) All offerors shall submit the information required in paragraphs (d) through (f) of this provision to comply with debt collection requirements of 31 U.S.C. 7701(c) and 3325(d), reporting requirements of 26 U.S.C. 6041, 6041A and 6050M, and implementing regulations issued by the IRS. If the resulting contract is subject to the payment reporting requirements, the failure or refusal by the offeror to furnish the information may result in a 31 percent reduction of payments otherwise due under the contract.
(c) The TIN may be used by the government to collect and report on any delinquent amounts arising out of the offeror's relationship with the government (31 U.S.C. 7701(c)(3). If the resulting contract is subject to payment recording requirements, the TIN provided hereunder may be matched with IRS records to verify the accuracy of the offeror's TIN.
(d) *Taxpayer Identification Number (TIN):*

_____

[ ] TIN has been applied for.
[ ] TIN is not required, because:_____

_____

[ ] Offeror is a nonresident alien, foreign corporation or foreign partnership that does not have income effectively connected with the conduct of a trade or business in the United States and does not have an office or place of business or a fiscal paying agent in the United States;
[ ] Offeror is an agency or instrumentality of a foreign government;
[ ] Offeror is an agency or instrumentality of the federal government.

(e) *Type of organization:*

[ ] sole proprietorship;

[ ] partnership;

[ ] corporate entity (not tax-exempt);

[ ] corporate entity (tax-exempt);

[ ] government entity (federal, sate or local);

[ ] foreign government;

[ ] international organization per-26 CFR 1.6049-4;

[ ] other _____.

(f) Common parent.

[ ] Offeror is not owned or controlled by a common parent as defined in paragraph (a) of this provision.

Name and TIN of common parent

Name _____

TIN _____

As Built Drawings

DWG NO: COR121	SH 1

ZONE	REV	REVISIONS	DATE	APPROVAL

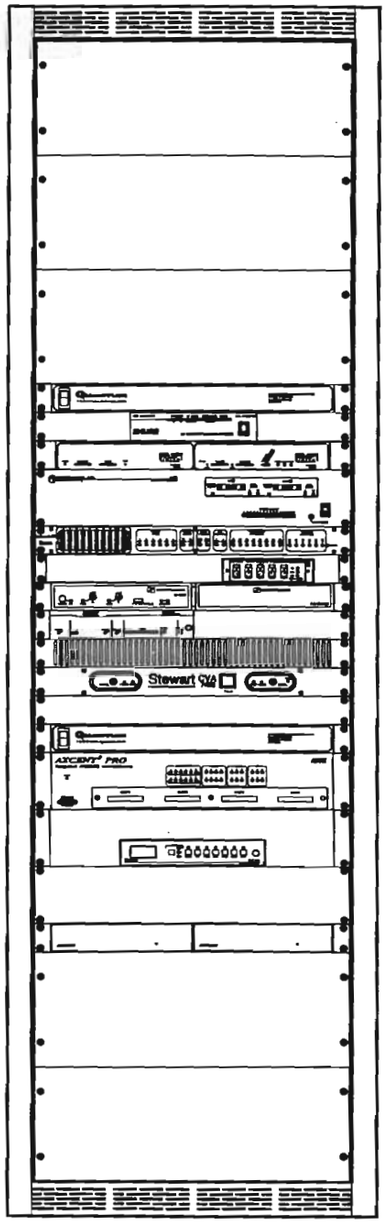

4RU VENT PANEL

4RU VENT PANEL

4RU VENT PANEL

QUANTUM TECHNOLOGIES QTI1511 POWER DISTRIBUTION MODULE
SHURE SC14/84 WIRELESS SYSTEM
ASPI EF600 TELECONFERENCING

LECTROSONICS AM16 MIXER

QUANTUM TECHNOLOGIES CRAIS 3 MULTI-FUNCTION ANALOG UNIT
RDL RU-MX5 MIXER w/ 1RU SHELF
SENNHEISER SI1015 I/R RECEIVER, w/ GA1013-CC
SHURE DFR11EQ-5 DIGITAL EQUALIZER
1RU VENT PANEL
STEWART CVA7400 POWER AMPLIFIER
1RU BLANK
QUANTUM TECHNOLOGIES QTI1511 POWER DISTRIBUTION MODULE

AMX AXCENT3 PRO, INTEGRATED ACCESS CONTROLLER

EXTRON DVS-150 VIDEO SCALER

2RU BLANK

ALTINEX DA1506 DISTRIBUTION AMPLIFIER (x2)

4RU VENT PANEL

4RU VENT PANEL

ALTAS WA100-70B EQUIPMENT RACK w/ CS-HDPR CASTER

INTERNAL RACK EQUIPMENT

AUDIO COMPONENTS

LECTROSONICS TA1 LINE LEVEL ADAPTER
1 EA. RDL ST-SSR1 SOLID STATE RELAY
1 EA. RDL ST-MX3 LINE LEVEL MIXER
3 EA. RDL PS24A POWER SUPPLIES

VIDEO COMPONENTS

LECTROSONICS PT3 PROTOCOL TRANSLATOR
LECTROSONICS VI24 VIDEO SWITCHER INTERFACE
AMX PS4.2 (x2) POWER SUPPLY
VIDEOTEK VDA16 VIDEO DA

PLOT: Jan 04, 2002 - 2:14pm

AS BUILT

UNLESS OTHERWISE SPECIFIED		DFTSMN: K. JOHNSON 01-04-02
INTERPRET PER DOD-STD-100	DIMENSIONAL TOLERANCES ON (PER ANSI Y14.5)	DSGN:
THREADS PER ANSI Y14.6	MILLIMETERS: DECIMALS: ANGLES XX ± ___ XX ± 0.01 XXX± ___ XXX± 0.005	ALD ENGR: C. SHERRY 01-04-02
REMOVE ALL BURRS AND BREAK ALL SHARP EDGES		VID ENGR: B. MCCULLOUGH 01-04-02
IDENTIFY BY BAG & OR TAG PER MIL-STD-130	MATERIAL	MCH ENGR:
SURFACE FINISH 125	FINISH	MFG:
		CONTRACT NO:
		DESIGN APPROVAL
		OTHER APPROVAL

QUANTUM TECHNOLOGIES, INC.

A/V RACK ELEVATION
BANKRUPTCY COURTROOM 223D
CORPUS CHRISTI, TX

SIZE	CAD FILE REF:	DWG NO:
B	COR120BR	COR121

SCALE	UNIT WT	SHEET 1 OF 2

As Built Drawings

DWG NO.	CDR121	SH 2

ZONE	REV	REVISIONS	DATE	APPROVAL

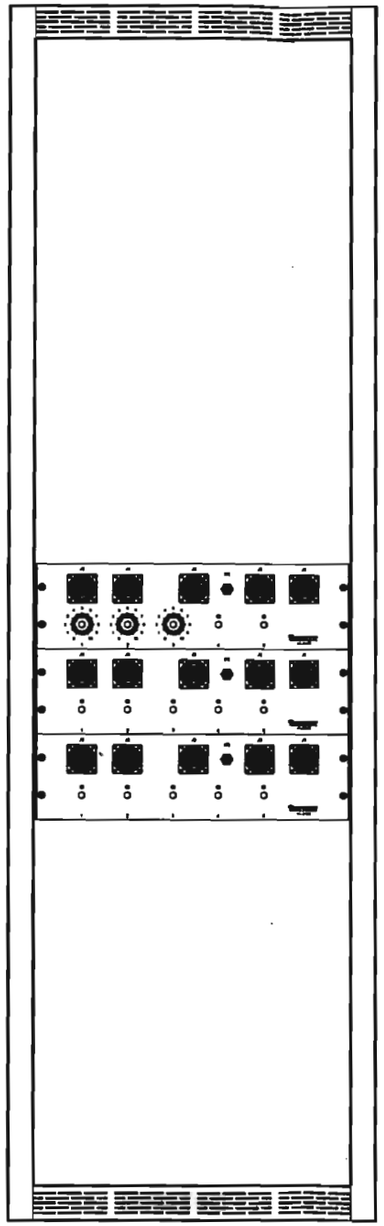

QUANTUM TECHNOLOGIES QTI1950 MULT PANEL w/ ATTENUATORS

QUANTUM TECHNOLOGIES QTI1950 MULT PANEL

QUANTUM TECHNOLOGIES QTI1950 MULT PANEL

ALTAS WA100-70B EQUIPMENT RACK w/ CS-HDPR CASTER

PLOT: Jan 04, 2002 - 2:14pm

QUANTUM TECHNOLOGIES, INC.

DRAWN BY M. JENNINGS

DATE 01-04-02

REAR RACK ELEVATION
BANKRUPCTY COURTROOM 223D

SIZE	CAD FILE REF:	DWG NO:
B	CDR120MAG	CDR121
SCALE	UNIT WT	SHEET 2 OF 2

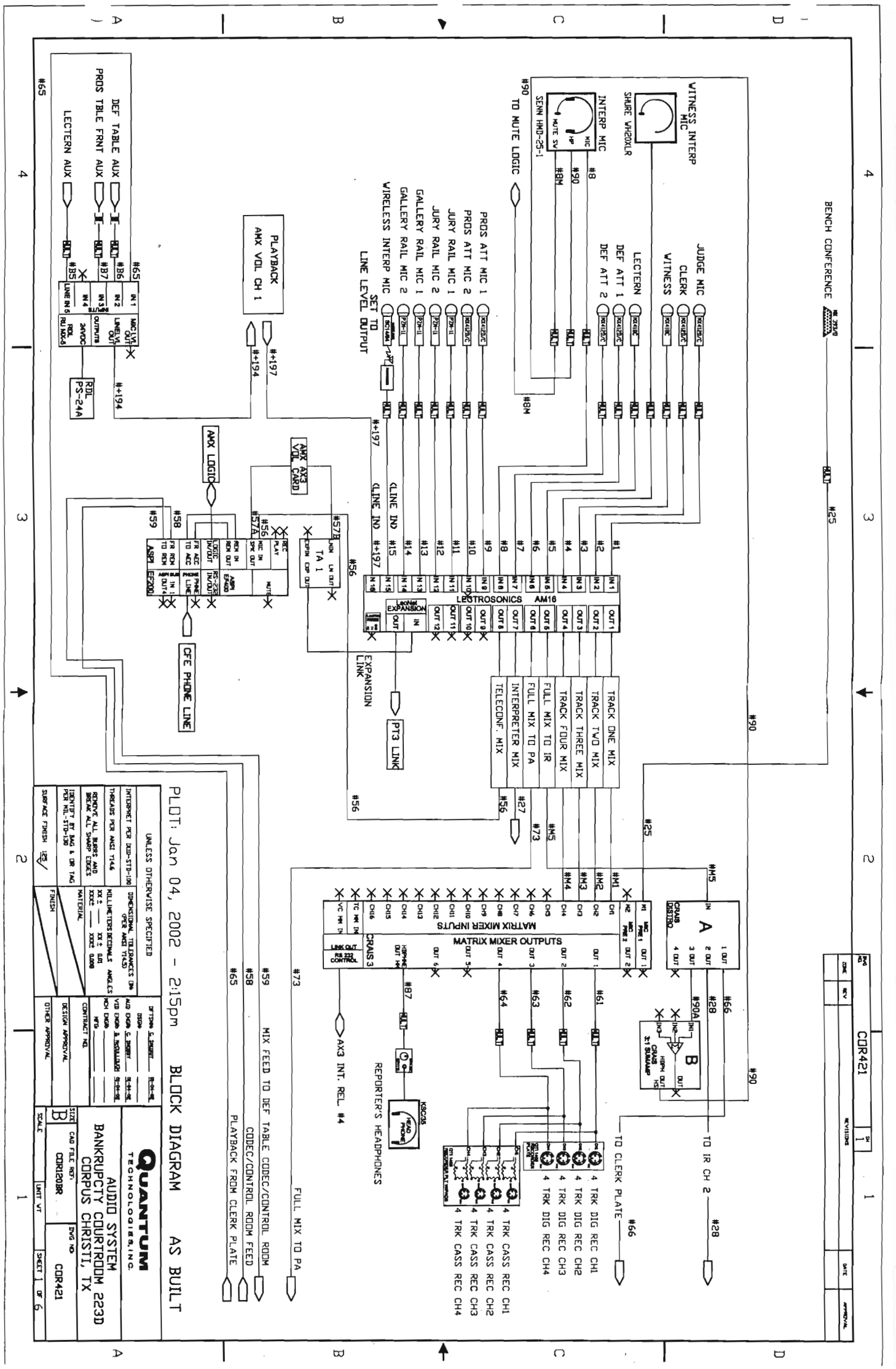
BENCH CONFERENCE
WITNESS INTERP MIC
JUDGE MIC
CLERK
WITNESS
SHURE WH20XLR
LECTERN
DEF ATT 1
DEF ATT 2
INTERP MIC
SENN HMD-25-1
TO MUTE LOGIC
PROS ATT MIC 1
PROS ATT MIC 2
JURY RAIL MIC 1
JURY RAIL MIC 2
GALLERY RAIL MIC 1
GALLERY RAIL MIC 2
WIRELESS INTERP MIC
SET TO LINE LEVEL OUTPUT
DEF TABLE AUX
PROS TBLE FRNT AUX
LECTERN AUX
PLAYBACK
AMX VOL CH 1
AMX LOGIC
AMX AX3 VOL CARD
LECTROSONICS AM16
EXPANSION LINK
PT3 LINK
CFE PHONE LINE
TRACK ONE MIX
TRACK TWO MIX
TRACK THREE MIX
TRACK FOUR MIX
FULL MIX TO IR
FULL MIX TO PA
INTERPRETER MIX
TELECONF. MIX
MATRIX MIXER INPUTS
MATRIX MIXER OUTPUTS
REPORTER'S HEADPHONES
AX3 INT. REL. #4
FULL MIX TO PA
MIX FEED TO DEF TABLE CODEC/CONTROL ROOM
CODEC/CONTROL ROOM FEED
PLAYBACK FROM CLERK PLATE
TO CLERK PLATE
TO IR CH 2
4 TRK DIG REC CH1
4 TRK DIG REC CH2
4 TRK DIG REC CH3
4 TRK DIG REC CH4
4 TRK CASS REC CH1
4 TRK CASS REC CH2
4 TRK CASS REC CH3
4 TRK CASS REC CH4
PLOT: Jan 04, 2002 - 2:15pm
BLOCK DIAGRAM AS BUILT
QUANTUM TECHNOLOGIES, INC.
AUDIO SYSTEM
BANKRUPCTY COURTROOM 223D
CORPUS CHRISTI, TX
CDR421
CDR120BR

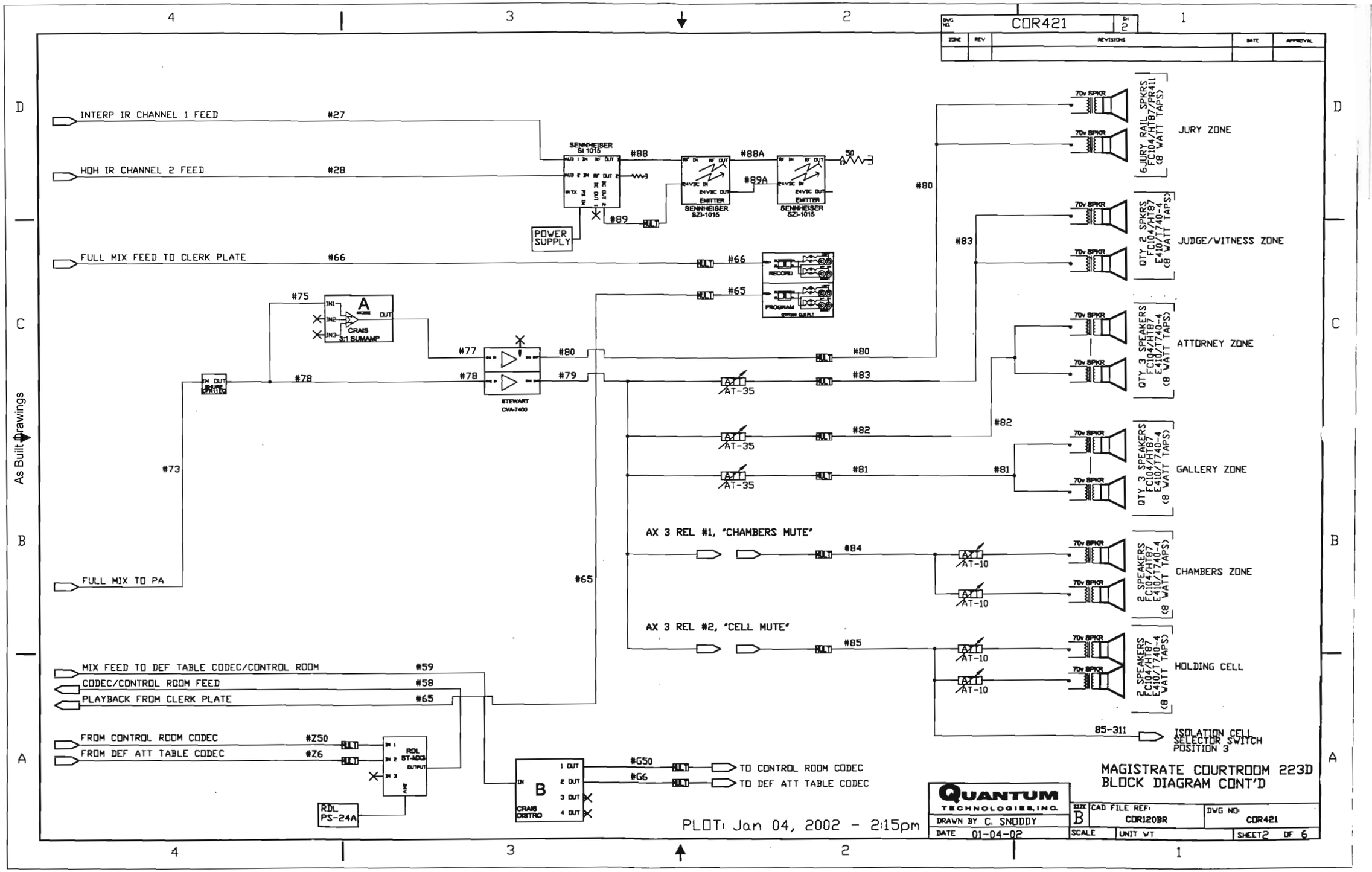
COR421
INTERP IR CHANNEL 1 FEED #27
HOH IR CHANNEL 2 FEED #28
SENNHEISER SI 1015
#88
#88A
#89
#89A
50
SENNHEISER SZI-1015
EMITTER
POWER SUPPLY
FULL MIX FEED TO CLERK PLATE #66
#66
#65
RECORD
PROGRAM
#75
CRAIS 3:1 SUMAMP
#77
#78
#79
#80
STEWART CVA-7400
#73
AT-35
#82
#81
FULL MIX TO PA
#65
AX 3 REL #1, 'CHAMBERS MUTE'
#84
AT-10
AX 3 REL #2, 'CELL MUTE'
#85
MIX FEED TO DEF TABLE CODEC/CONTROL ROOM #59
CODEC/CONTROL ROOM FEED #58
PLAYBACK FROM CLERK PLATE #65
FROM CONTROL ROOM CODEC #Z50
FROM DEF ATT TABLE CODEC #Z6
RDL ST-MDC3
RDL PS-24A
CRAIS DISTRO
#G50
#G6
TO CONTROL ROOM CODEC
TO DEF ATT TABLE CODEC
70v SPKR
6 JURY RAIL SPKRS FC104/HT87/PR411 (8 WATT TAPS)
JURY ZONE
QTY 2 SPKRS FC104/HT87 E410/T740-4 (8 WATT TAPS)
JUDGE/WITNESS ZONE
QTY 3 SPEAKERS FC104/HT87 E410/T740-4 (8 WATT TAPS)
ATTORNEY ZONE
GALLERY ZONE
2 SPEAKERS FC104/HT87 E410/T740-4 (8 WATT TAPS)
CHAMBERS ZONE
HOLDING CELL
85-311
ISOLATION CELL SELECTOR SWITCH POSITION 3
MAGISTRATE COURTROOM 223D
BLOCK DIAGRAM CONT'D
QUANTUM TECHNOLOGIES, INC.
DRAWN BY C. SNODDY
DATE 01-04-02
CAD FILE REF: COR120BR
DWG NO: COR421
SIZE B
SCALE
UNIT WT
SHEET 2 OF 6
PLOT: Jan 04, 2002 - 2:15pm
As Built Drawings

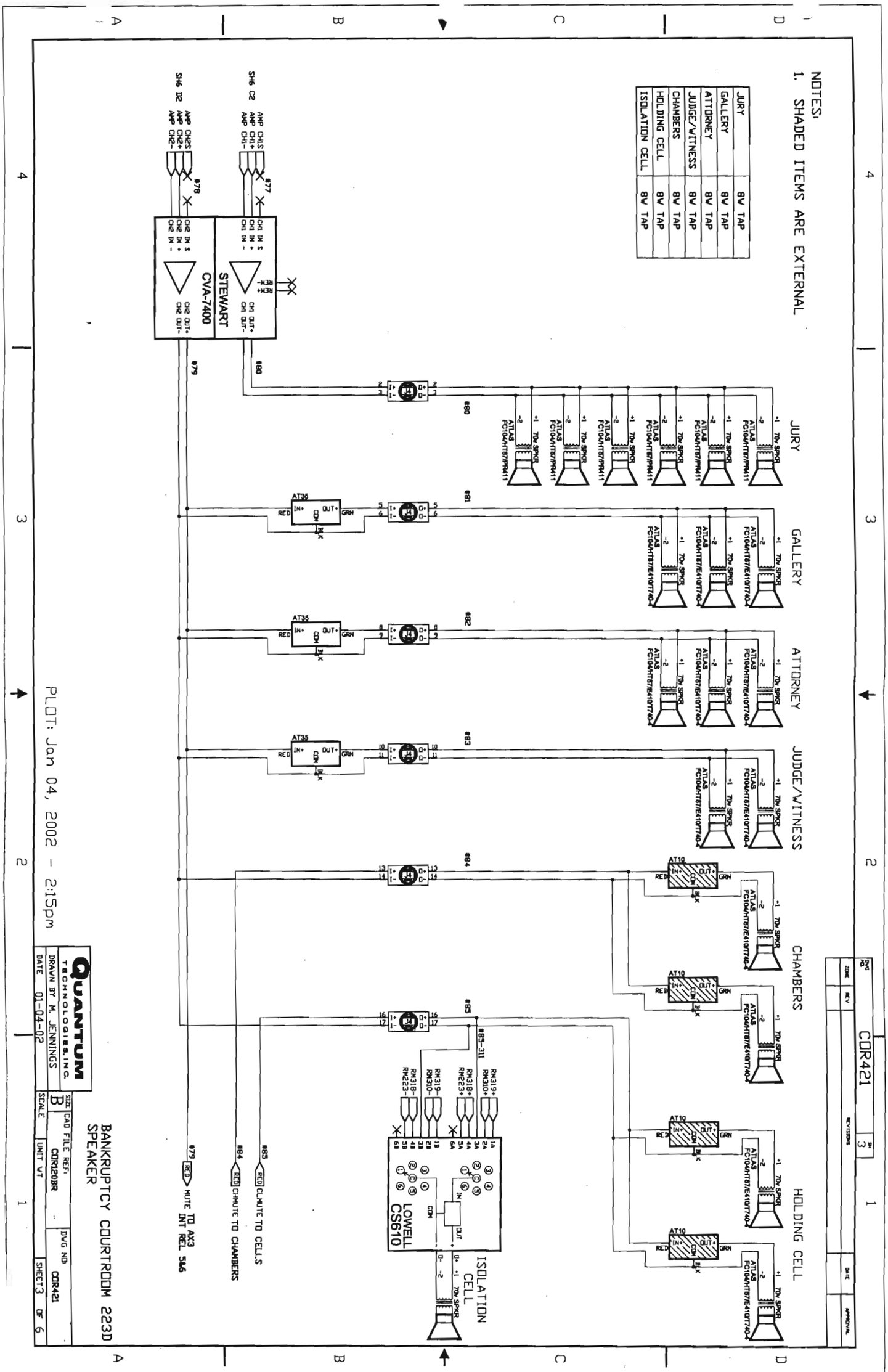
NOTES:
1. SHADED ITEMS ARE EXTERNAL
JURY 8Ω TAP
GALLERY 8Ω TAP
ATTORNEY 8Ω TAP
JUDGE/WITNESS 8Ω TAP
CHAMBERS 8Ω TAP
HOLDING CELL 8Ω TAP
ISOLATION CELL 8Ω TAP
STEWART CVA-7400
LOWELL CS610
JURY
GALLERY
ATTORNEY
JUDGE/WITNESS
CHAMBERS
HOLDING CELL
ISOLATION CELL
#79 RED MUTE TO AX3 INT REL 546
#84 RED CHMUTE TO CHAMBERS
#85 RED CLMUTE TO CELLS
PLOT: Jan 04, 2002 - 2:15pm
QUANTUM TECHNOLOGIES, INC.
DRAWN BY M. JENNINGS
DATE 01-04-02
SIZE B
CAD FILE REF: CDR203R
SCALE
UNIT VT
DWG NO CDR421
SHEET 3 OF 6
BANKRUPTCY COURTROOM 223D
SPEAKER
CDR421

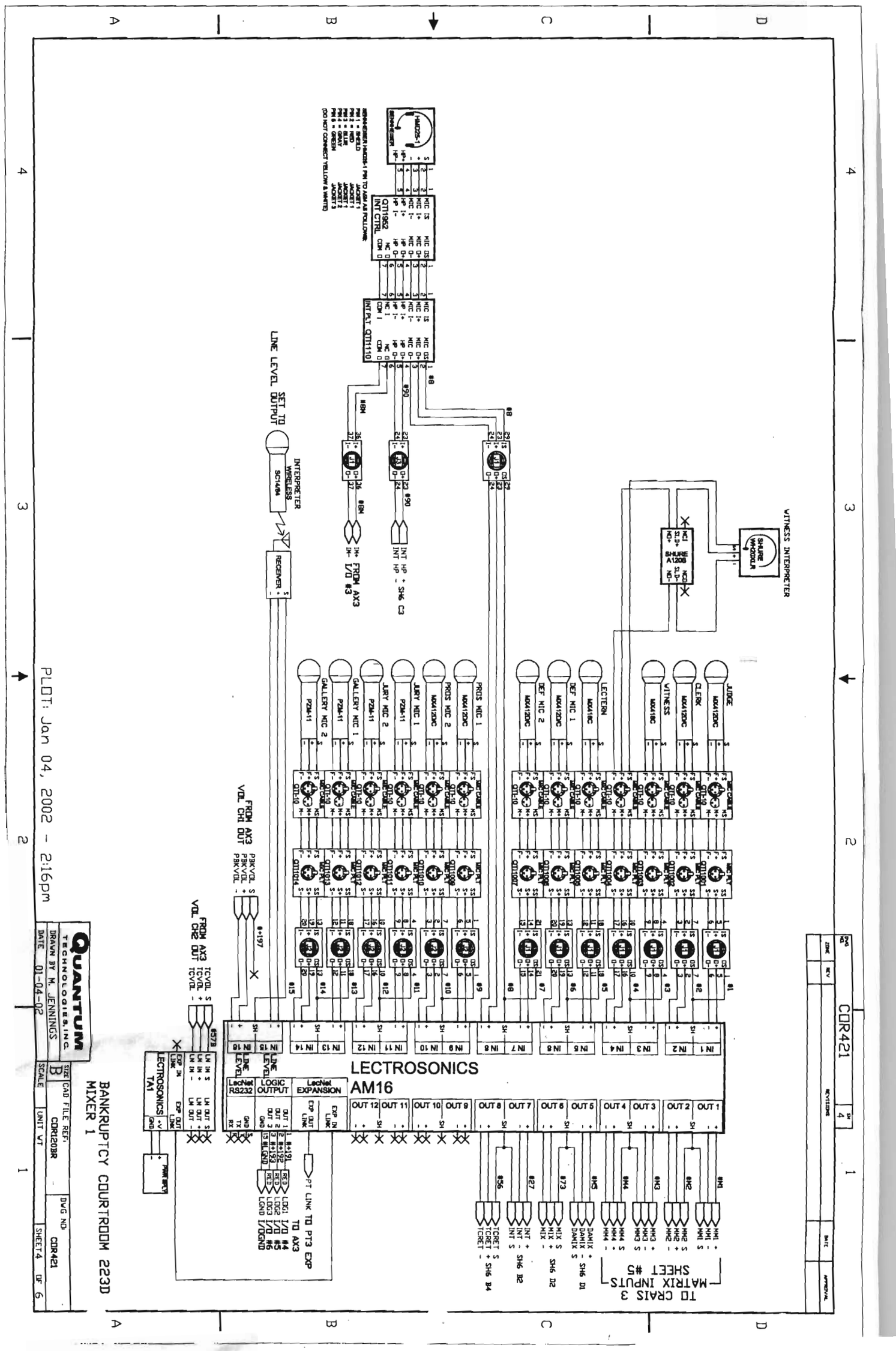
BANKRUPTCY COURTROOM 223D
MIXER 1
QUANTUM TECHNOLOGIES, INC.
DRAWN BY M. JENNINGS
DATE 01-04-02
SIZE B
CAD FILE REF: COR120BR
DWG NO: COR421
SHEET 4 OF 6
PLOT: Jan 04, 2002 - 2:16pm
LECTROSONICS
AM16
LecNet RS232
LOGIC OUTPUT
LecNet EXPANSION
LECTROSONICS TA1
TO CRAIS 3 MATRIX INPUTS SHEET #5
WITNESS INTERPRETER
SHURE A120B
INTERPRETER WIRELESS
SET TO OUTPUT
LINE LEVEL
FROM AX3 I/O #3
FROM AX3 VOL CH1 OUT
FROM AX3 VOL CH2 OUT
TO AX3
PT LINK TO PT3 EXP
COR421

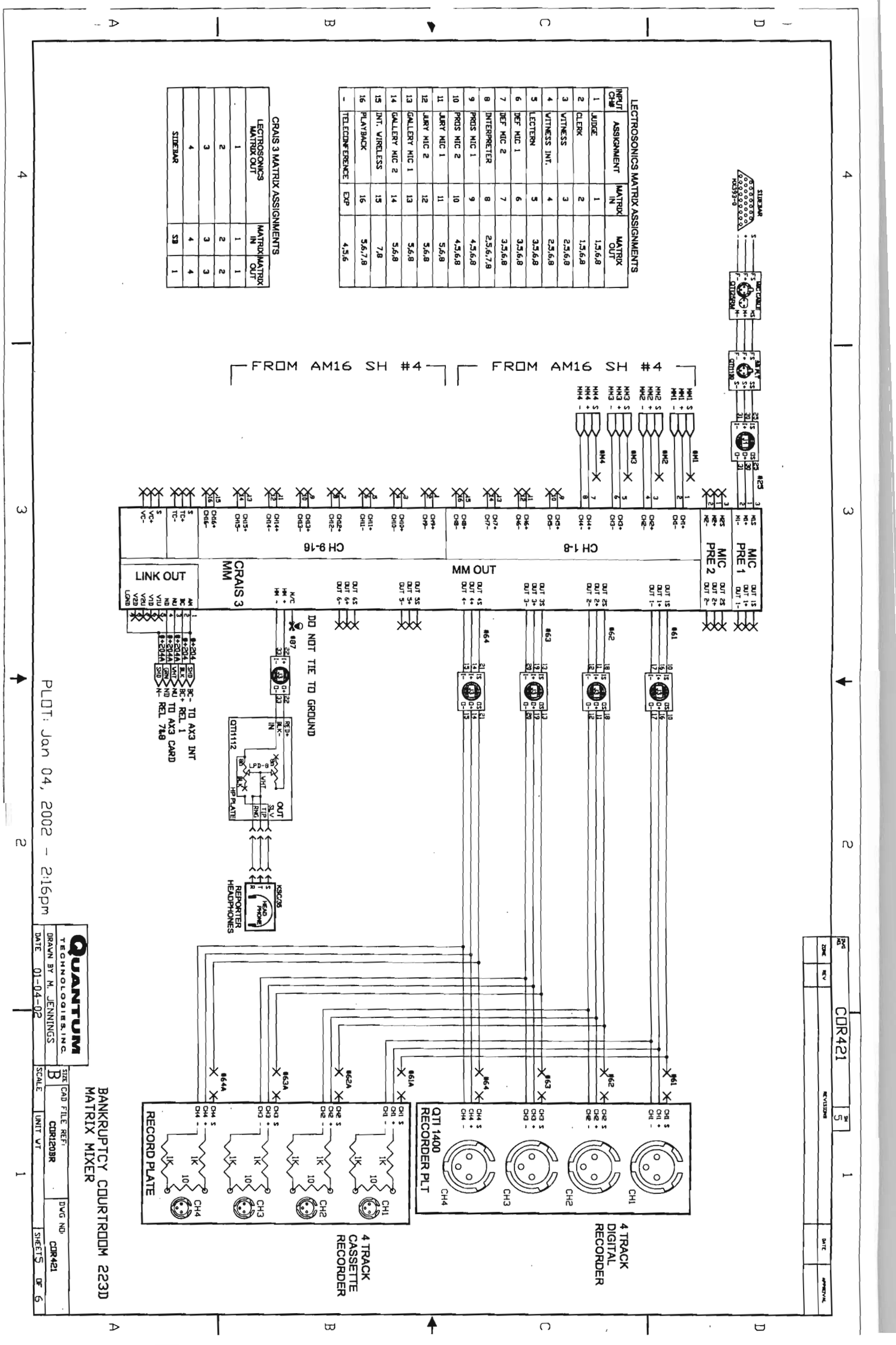
LECTROSONICS MATRIX ASSIGNMENTS
INPUT CH# | ASSIGNMENT | MATRIX IN | MATRIX OUT
1 JUDGE 1 1,5,6,8
2 CLERK 2 1,5,6,8
3 WITNESS 3 2,5,6,8
4 WITNESS INT. 4 2,5,6,8
5 LECTERN 5 3,5,6,8
6 DEF MIC 1 6 3,5,6,8
7 DEF MIC 2 7 3,5,6,8
8 INTERPRETER 8 2,5,6,7,8
9 PROS MIC 1 9 4,5,6,8
10 PROS MIC 2 10 4,5,6,8
11 JURY MIC 1 11 5,6,8
12 JURY MIC 2 12 5,6,8
13 GALLERY MIC 1 13 5,6,8
14 GALLERY MIC 2 14 5,6,8
15 INT. WIRELESS 15 7,8
16 PLAYBACK 16 5,6,7,8
- TELECONFERENCE EXP 4,5,6
CRAIS 3 MATRIX ASSIGNMENTS
LECTROSONICS MATRIX OUT | MATRIX IN | MATRIX OUT
1 1 1
2 2 2
3 3 3
4 4 4
SIDEBAR S3 1
FROM AM16 SH #4
FROM AM16 SH #4
CH 1-8
CH 9-16
MIC PRE 1
MIC PRE 2
MM OUT
CRAIS 3 MM
LINK OUT
DO NOT TIE TO GROUND
QTI1112
LPD-8
HP PLATE
REPORTER HEADPHONES
TO AX3 INT REL 1
TO AX3 CARD REL 7&8
QTI 1400 RECORDER PLT
4 TRACK DIGITAL RECORDER
4 TRACK CASSETTE RECORDER
RECORD PLATE
CH1
CH2
CH3
CH4
1K
10
#61
#62
#63
#64
#61A
#62A
#63A
#64A
#23
#87
SIDEBAR
QUANTUM TECHNOLOGIES, INC.
BANKRUPTCY COURTROOM 223D
MATRIX MIXER
DRAWN BY M. JENNINGS
DATE 01-04-02
SIZE B
CAD FILE REF: CDR1200R
DWG NO: CDR421
SCALE
UNIT VT
SHEETS OF 6
PLOT: Jan 04, 2002 - 2:16pm

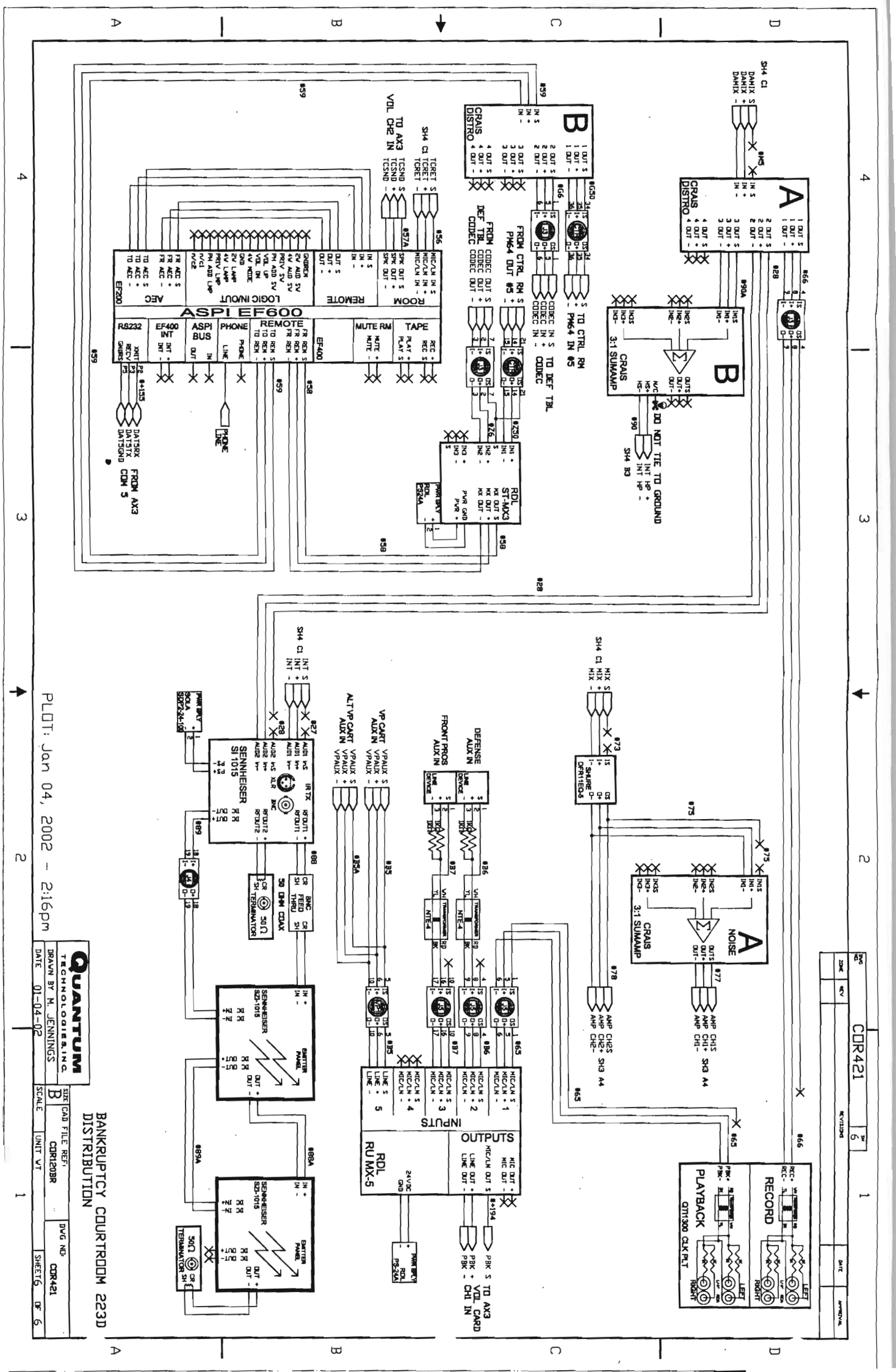
BANKRUPTCY COURTROOM 223D
DISTRIBUTION
QUANTUM TECHNOLOGIES, INC.
DRAWN BY M. JENNINGS
DATE 01-04-02
SIZE B
CAD FILE REF: COR120BR
DWG NO: COR421
SCALE
UNIT WT
SHEET 6 OF 6
PLOT: Jan 04, 2002 - 2:16pm
COR421
ASPI EF600
CRAIS DISTRO
CRAIS 3:1 SUMAMP
RDL ST-MX3
RDL RU MX-5
SENNHEISER SI 1015
SENNHEISER SZI-1015
INPUTS
OUTPUTS
RECORD
PLAYBACK
QTI1300 CLK PLT
DO NOT TIE TO GROUND
TO CTRL RM PM64 IN #5
TO DEF TBL CODEC
FROM CTRL RM PM64 OUT #5
FROM DEF TBL CODEC
TO AX3 VOL CH2 IN
FROM AX3 COM 5
TO AX3 VOL CARD CH1 IN
50 OHM COAX
50Ω TERMINATOR
DEFENSE AUX IN
FRONT PROS AUX IN
VP CART AUX IN
ALT VP CART AUX IN
NOISE
SHURE DFR11EQ-5

DWG NO.	COR0102	SH 1

ZONE	REV	REVISIONS	DATE	APPROVAL

INTERNAL RACK EQUIPMENT

1 EA. LECTROSONICS TA1 LINE LEVEL ADAPTER
1 EA. LECTROSONICS PT3 PROTOCOL TRANSLATOR
1 EA. LECTROSONICS VI24 VIDEO SWITCHER INTERFACE
1 EA. RDL ST-SSR1 SOLID STATE RELAY
1 EA. RDL ST-MX3 LINE LEVEL MIXER
4 EA. RDL PS24A POWER SUPPLY
2 EA. AMX PS4.2 POWER SUPPLY
1 EA. VIDEOTEK VDA16 VIDEO DA

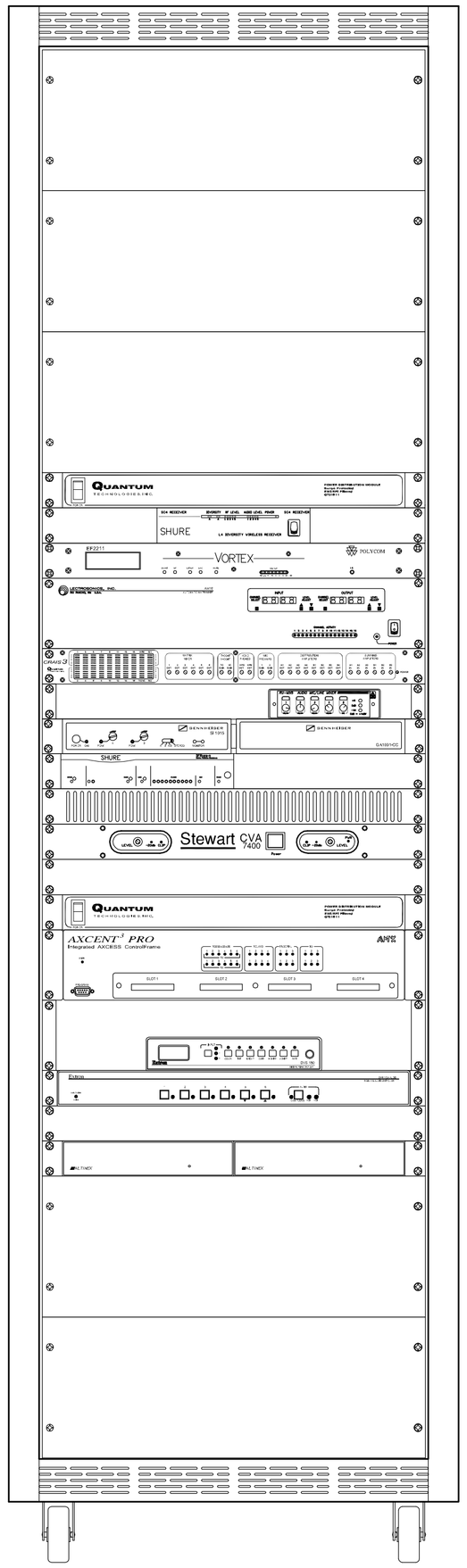

4RU VENT PANEL

4RU VENT PANEL

4RU VENT PANEL

QUANTUM TECHNOLOGIES QTI1511 POWER DISTRIBUTION MODULE

SHURE SC14/84 WIRELESS SYSTEM

NEW POLYCOM EF2211 TELECONFERENCE UNIT

LECTROSONICS AM16 MIXER

QUANTUM TECHNOLOGIES CRAIS 3 MULTI-FUNCTION ANALOG UNIT

RDL RU-MX5 MIXER w/ 1RU SHELF

SENNHEISER SI1015 I/R RECEIVER, w/ GA1013-CC

SHURE DFR11EQ-5 DIGITAL EQUALIZER

1RU VENT PANEL

STEWART CVA7400 POWER AMPLIFIER

1RU BLANK

QUANTUM TECHNOLOGIES QTI1511 POWER DISTRIBUTION MODULE

AMX AXCENT3 PRO, INTEGRATED ACCESS CONTROLLER

EXTRON DVS-150 VIDEO SCALER

EXTRON SW6 RGBHVA AUDIO/VIDEO SWITCHER

1RU BLANK PANEL

ALTINEX DA1506 DISTRIBUTION AMPLIFIER (x2)

4RU VENT PANEL

4RU VENT PANEL

ALTAS WA100-70B EQUIPMENT RACK w/ CS-HDPR CASTER

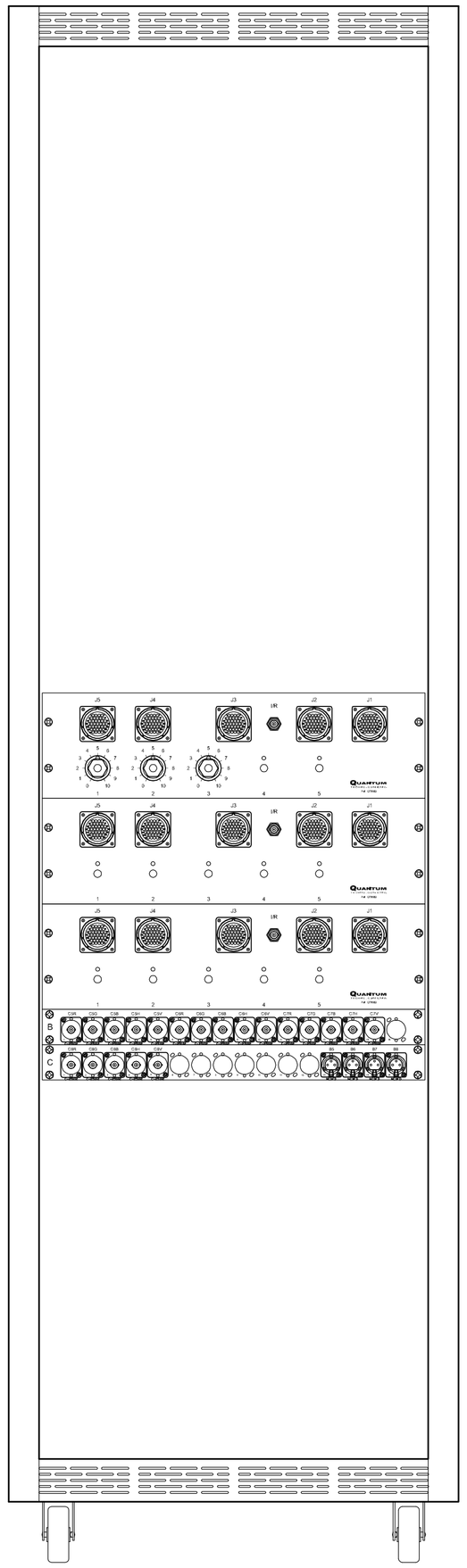

QUANTUM TECHNOLOGIES QTI1950 MULT PANEL w/ ATTENUATORS

QUANTUM TECHNOLOGIES QTI1950 MULT PANEL

QUANTUM TECHNOLOGIES QTI1950 MULT PANEL

MIDDLE ATLANTIC UNI-1 PANEL

MIDDLE ATLANTIC UNI-1 PANEL

ALTAS WA100-70B EQUIPMENT RACK w/ CS-HDPR CASTER

DRAWING LIST

COR0102
- SHEET 1 - RACK ELEVATIONS
- SHEET 2 - A/V BLOCK DIAGRAMS
- SHEET 3 - AUDIO SYSTEM, CALL DETAIL
- SHEET 4 - CONTROL, VIDEO I/O

AS BUILT

DFTSMN: M.JENNINGS 03-08-10	DWG NO: COR0102	QUANTUM TECHNOLOGIES, INC.	
DESIGN: 03-08-10			
AUD ENGR: C.SNODDY 03-08-10		A/V SYSTEM	
VID ENGR: D.McCULLOUGH 03-08-10	CAD FILE REF: CRT-COR0102-223D	JUDGE SCHMIDT COURTROOM 223D	
MCH ENGR: 03-08-10		CORPUS CHRISTI, TX	
MFG: 03-08-10			
PLOT: Jul 25, 2011 - 1:26pm By: mjennings	SIZE: D	SCALE:	CHARGE NO: CTXH02 / SHEET 1 OF 5

As Built Drawings

DWG NO.	CDR0101	SH 2

ZONE	REV	REVISIONS	DATE	APPROVAL

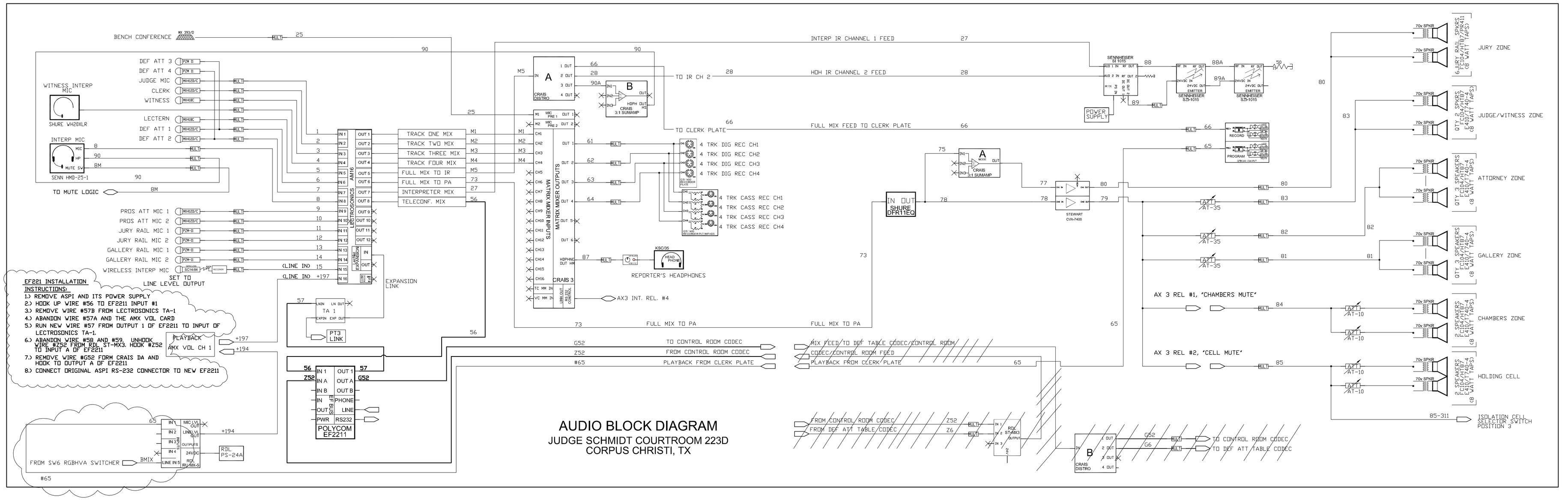

AUDIO BLOCK DIAGRAM

JUDGE SCHMIDT COURTROOM 223D
CORPUS CHRISTI, TX

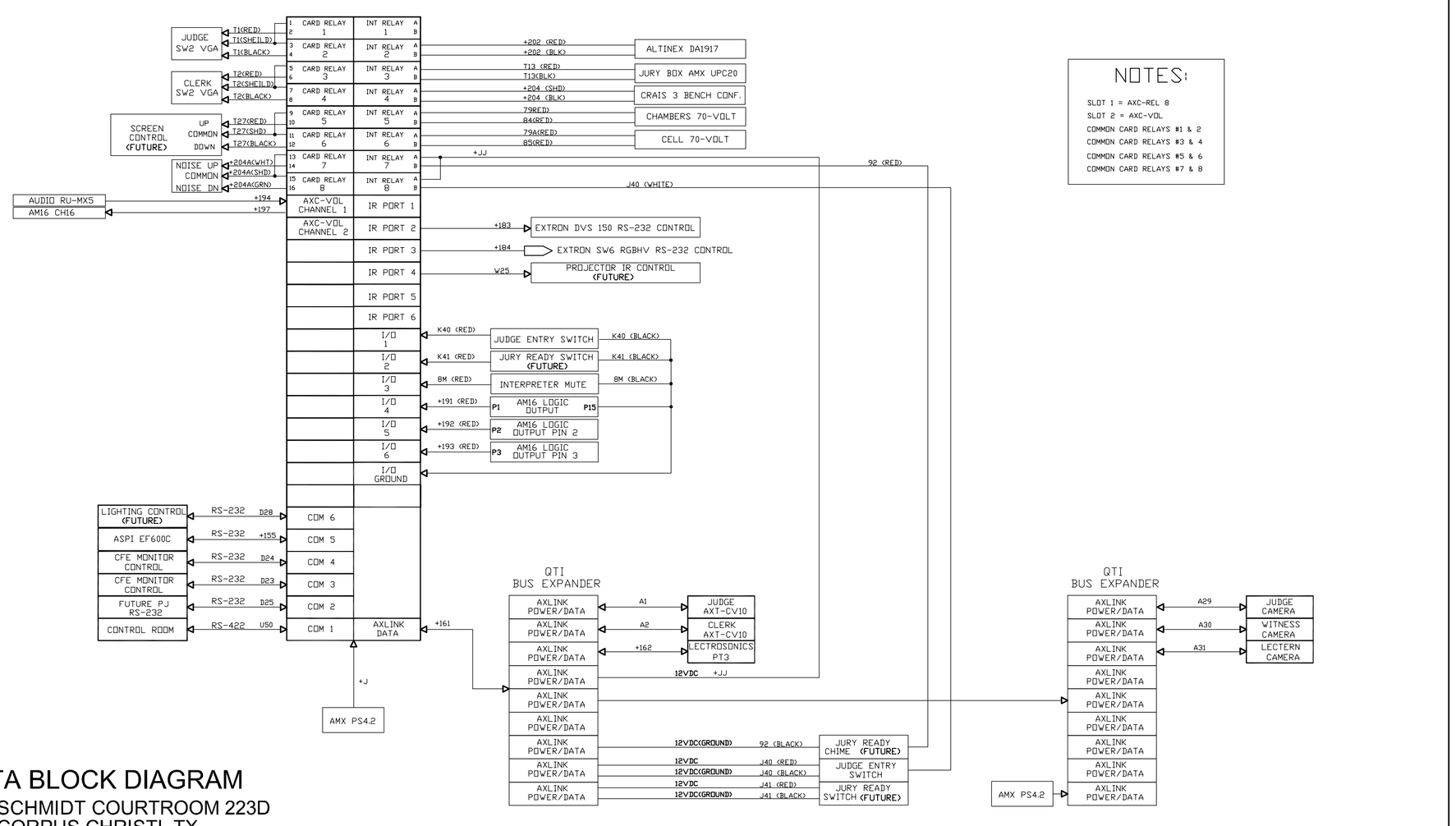

DATA BLOCK DIAGRAM

JUDGE SCHMIDT COURTROOM 223D
CORPUS CHRISTI, TX

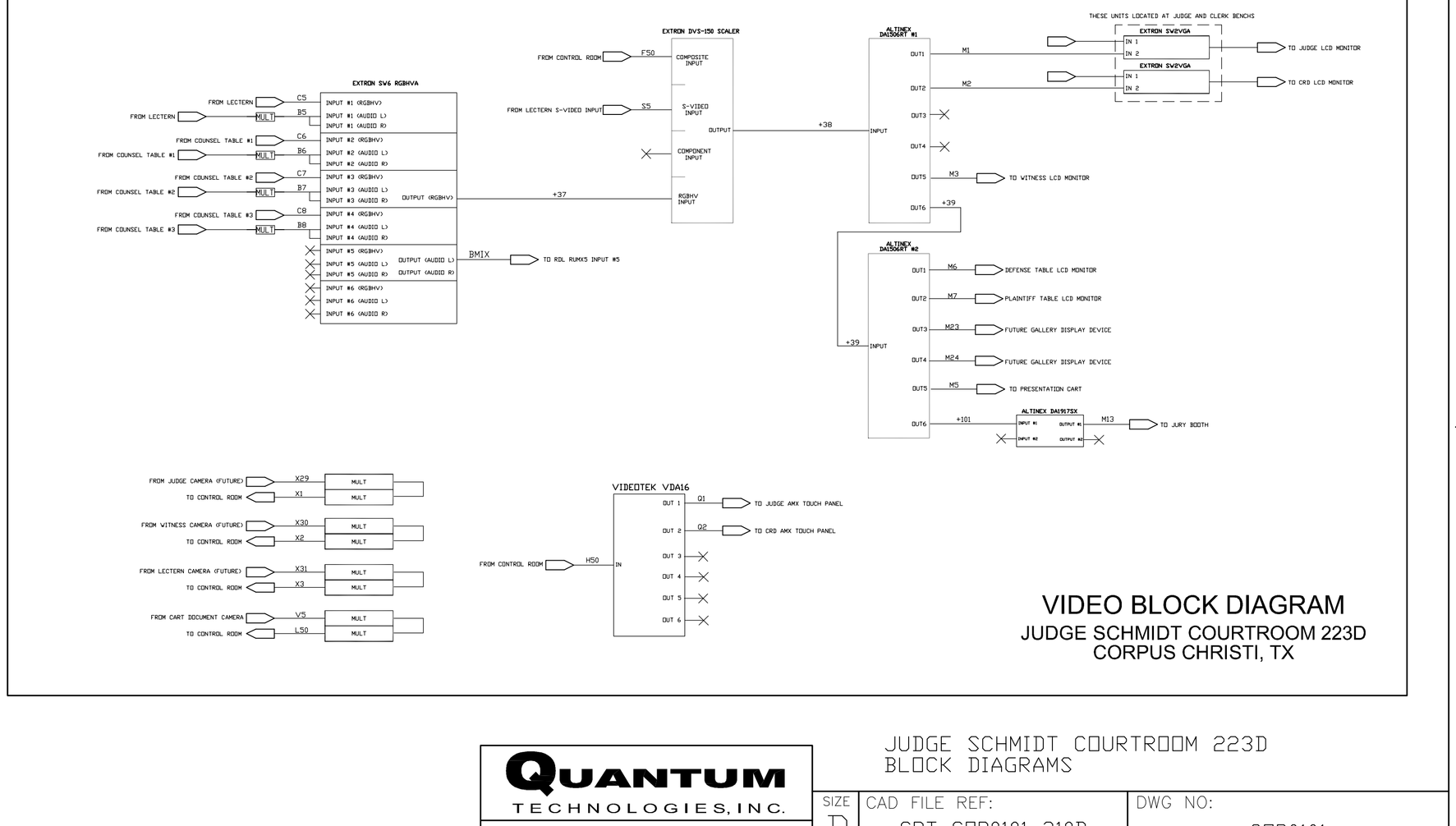

VIDEO BLOCK DIAGRAM

JUDGE SCHMIDT COURTROOM 223D
CORPUS CHRISTI, TX

QUANTUM TECHNOLOGIES, INC.	JUDGE SCHMIDT COURTROOM 223D BLOCK DIAGRAMS		
DRAWN BY DM/CS	SIZE D	CAD FILE REF: CRT-CDR0101-310D	DWG NO: CDR0101
DATE 03-08-10	SCALE:	PLOT: Jul 25, 2011 - 1:27pm By: mjennings	SHEET 2 OF 5

As Built Drawings

DWG NO.	CDR0102	SH 3

ZONE	REV	REVISIONS	DATE	APPROVAL

LECTROSONICS MATRIX ASSIGNMENTS

INPUT CH#	ASSIGNMENT	MATRIX IN	MATRIX OUT
1	JUDGE	1	1,5,6,8
2	CLERK	2	1,5,6,8
3	WITNESS	3	2,5,6,8
4	WITNESS INT.	4	2,5,6,8
5	LECTERN	5	3,5,6,8
6	DEF MIC 1	6	3,5,6,8
7	DEF MIC 2	7	3,5,6,8
8	INTERPRETER	8	2,5,6,7,8
9	PROS MIC 1	9	4,5,6,8
10	PROS MIC 2	10	4,5,6,8
11	JURY MIC 1	11	5,6,8
12	JURY MIC 2	12	5,6,8
13	GALLERY MIC 1	13	5,6,8
14	GALLERY MIC 2	14	5,6,8
15	INT. WIRELESS	15	7,8
16	PLAYBACK	16	5,6,7,8
-	TELECONFERENCE	EXP	4,5,6

CRAIS 3 MATRIX ASSIGNMENTS

LECTROSONICS MATRIX OUT	MATRIX IN	MATRIX OUT
1	1	1
2	2	2
3	3	3
4	4	4
SIDEBAR	SB	1

JUDGE HEAD COURTROOM 310D
AUDIO SYSTEM

QUANTUM TECHNOLOGIES, INC.	SIZE	CAD FILE REF:	DWG NO:
DRAWN BY M.JENNINGS	D	CRT-CDR0102-223D	CDR0102
DATE 03-08-10	SCALE:	PLOT: Jul 25, 2011 - 1:27pm By: mjennings	SHEET 3 OF 5

As Built Drawings

DWG NO.	COR0102	SH 4

ZONE	REV	REVISIONS	DATE	APPROVAL

TO CTRL ROOM AX3 COM1

FUTURE PROJECTOR

ZN B1 CFE MONITOR

ZN B1 CFE MONITOR

FUTURE LIGHTING

SH3 C7 INTERPRETER

SH4 C5 AM-16 LOGIC

FUTURE PROJECTOR

AMX AXCENT 3 PRO

INTERNAL RELAYS

SLOT 1 AXC-REL8

SLOT 2 AXC-VOL

SLOT 3

SLOT 4

COM PORT #1

COM PORT #2

COM PORT #3

COM PORT #4

COM PORT #5

COM PORT #6

PROGRAM

I/O

IR/SVTA

JURY BOOTH

ZN A8 DA1917

SH3 C4 CRAIS 3 LOGIC

SH3 A7 CHMUTE AMP CH2

SH3 A7 CLMUTE AMP CH2

JDG SW2VGA

SH3 C4 CRAIS 3 LOGIC

CLK SW2VGA

FUTURE

SH3 B1 RUMX-1S

SH3 C6 AM16 CH16

SH4 C5 LOGS

SH4 C6 LOGR

LGND

SH3 B6 EF2211

SH3 C7 INTERPRETER

SH3 B8

SH3 C8 TAI EXP IN

PT LINK

LECTRO SONICS PT3

JURY FUTURE

JUDGE ENTRY

SEE JUDGE ENTRY & JURY READY DETAIL

JURY READY FUTURE

VIDEO TEK VDA-16

FROM CR AP OUT #22

FUTURE JUDGE CAMERA

FUTURE WITNESS CAMERA

FUTURE LECTERN CAMERA

FROM VP CART DOC CAM/VCR

FUTURE

RACK REAR PANEL

TO CNTRL RM AP IN #10

TO CNTRL RM AP IN #11

TO CNTRL RM AP IN #12

TO CNTRL RM AP IN #22

TO CNTRL RM AP IN #6

TOUCH PANEL

JUDGE

CLERK

TOUCH PANEL MONITOR

QTIBC # 1

QTIBC # 2

TYPICAL

AXLINK PLT

CONTROL PANEL JUDGE AMX AXU-SP+

CONTROL PANEL CLERK AMX AXU-SP+

JUDGE CAM

WITNESS CAM

LECTERN CAM

ALTINEX DA 1506RT #1

ALTINEX DA 1506RT #2

INPUT

OUTPUT 1

OUTPUT 2

OUTPUT 3

OUTPUT 4

OUTPUT 5

OUTPUT 6

HD15 PLATE

JUDGE MONITOR

CLERK MONITOR

WITNESS MONITOR

DEFENSE MONITOR

PLAINTIFF MONITOR

FLOOR MONITOR

LECTERN MONITOR

LCD

CFE

JUDGE CFE CPU

CLERK CFE CPU

EXTRON SW2VGA

LOCATE AT JUDGE BENCH

LOCATE AT CLERK BENCH

SH4 D6 AXC-REL8 REL1&2

SH4 D6 AXC-REL8 REL3&4

TEAC MKII

CFE FTR COMPUTER

Y CABLE

RADIO SHACK 15-1952

TAPE DECK INPUT A

COMPUTER OUTPUT

PLAYBACK INPUT B

TO CLERK PLATE

TO JURY BOOTH

ZN D7 AX3 REL2

ALTINEX DA1917SX

PWR SPLY

VP CART RGBHV

COUNSEL TABLE #1 RGBHV

COUNSEL TABLE #2 RGBHV

COUNSEL TABLE #3 RGBHV

EXTRON SW6 RGBHV A

VIDEO IN 1

VIDEO IN 2

VIDEO IN 3

VIDEO IN 4

VIDEO IN 5

VIDEO IN 6

CTRL

VIDEO OUT

AUDIO OUT

AUDIO IN 1

AUDIO IN 2

AUDIO IN 3

AUDIO IN 4

AUDIO IN 5

AUDIO IN 6

AUX + AUX - AUX S

SH3 B2 RU-MX5 INS

VP CART AUX IN

ALT VP CART AUX IN

FROM COUNSEL TABLE #1 AUX AUDIO

FROM COUNSEL TABLE #2 AUX AUDIO

FROM COUNSEL TABLE #3 AUX AUDIO

TRANSFORMER NTE-4

FROM CR AP OUT #13

FROM CART S-VIDEO

EXTRON DVS150

RGBHV OUTPUTS

RS232 CONTROL

NOTES:
1. POWER SUPPLY: 12 - 24VDC, 400 m.a. (min).
RECOMMEND RADIO DESIGN LABS P/N PS-24A
⚠ USE 1K RESISTOR FOR 12V PWR, 2K FOR 24V PWR.

MOMENTARY SWITCH NKK P/N YB25SKW01-04C-JC

AX3 I/O PORT #1

12VDC - 24VDC PWR SUPPLY OR QTI BUS CARD

MULT

RELAY AX3 CARD

PIGTAIL

CHIME

CLERK'S OFFICE

JURY READY PLATE BLOCK DIAGRAM FOR AMX

NOTES:
1. POWER SUPPLY: 12 - 24VDC, 400 m.a. (min).
RECOMMEND RADIO DESIGN LABS P/N PS-24A
⚠ USE 1K RESISTOR FOR 12V PWR, 2K FOR 24V PWR.

JUDGE ENTRY PLATE BLOCK DIAGRAM FOR AMX

JUDGE HEAD COURTROOM 310D
CONTROL, VIDEO I/O

QUANTUM TECHNOLOGIES, INC.

DRAWN BY	M.JENNINGS	SIZE	CAD FILE REF:	DWG NO:
DATE	03-08-10	D	CRT-COR0102-223D	COR0102
		SCALE:	PLOT: Jul 25, 2011 - 1:27pm By: mjennings	SHEET 4 OF 5

As Built Drawings

As Built Drawings

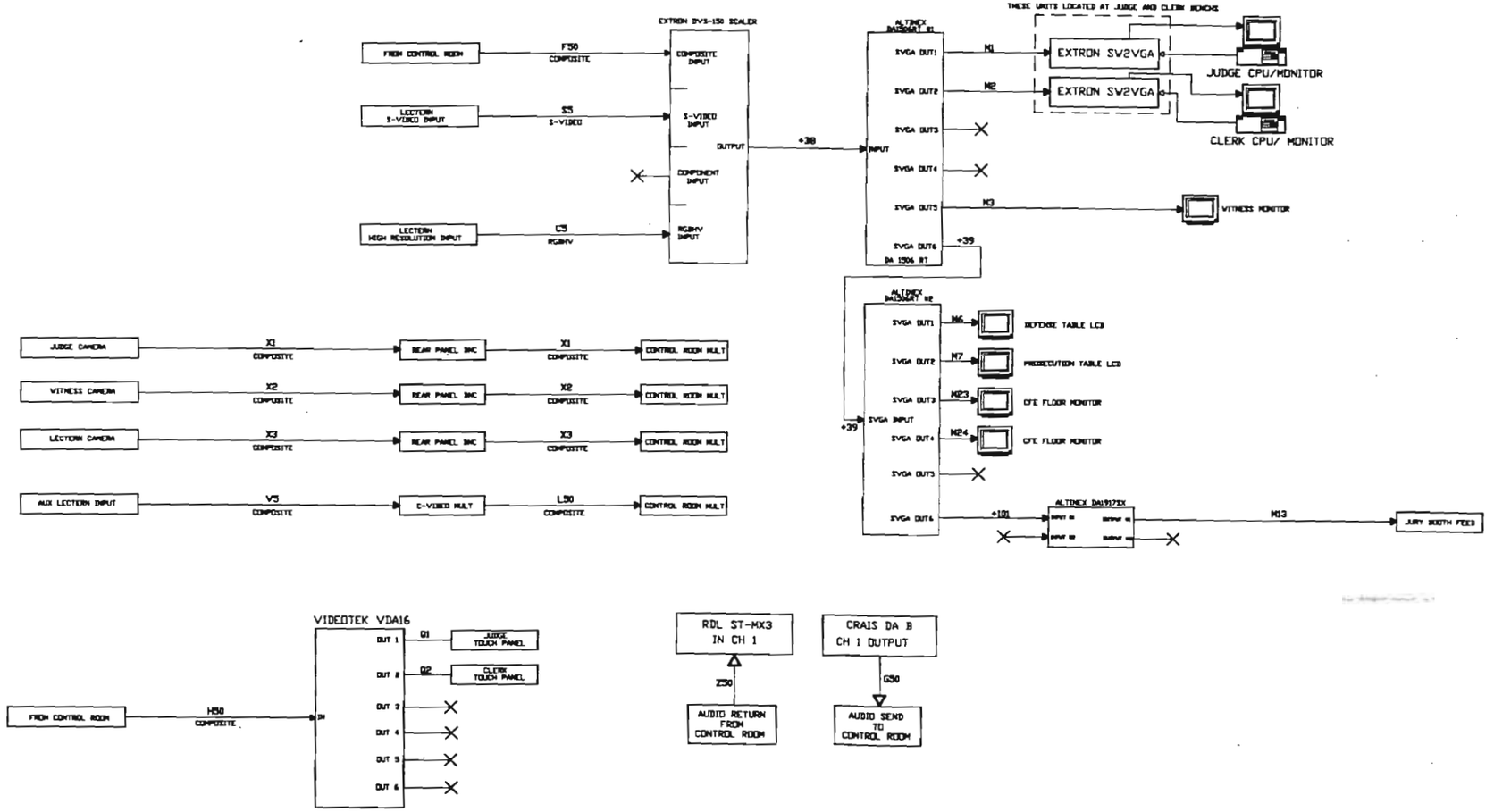

PLOT: Jan 04, 2002 - 2:16pm

AS BUILT
VIDEO BLOCK DIAGRAM

UNLESS OTHERWISE SPECIFIED		DFTSMN: B. McCULLOUGH 01-04-02	QUANTUM TECHNOLOGIES, INC.
INTERPRET PER DOD-STD-100	DIMENSIONAL TOLERANCES ON (PER ANSI Y14.5)	DSGN:	
THREADS PER ANSI Y14.6	MILLIMETERS DECIMALS ANGLES XX ± — XX ± 0.01 XXX± — XXX± 0.008	AUD ENGR: C. SHORRY 01-04-02	VIDEO SYSTEM BANKRUPTCY COURTROOM 223D CORPUS CHRISTI, TX
REMOVE ALL BURRS AND BREAK ALL SHARP EDGES		VID ENGR: B. McCULLOUGH 01-04-02	
IDENTIFY BY BAG & OR TAG PER MIL-STD-130	MATERIAL	MCH ENGR:	
SURFACE FINISH 125	FINISH	MFG:	
		CONTRACT NO.	SIZE B — CAD FILE REF: COR120BR — DWG NO: COR521
		DESIGN APPROVAL	
		OTHER APPROVAL	SCALE — UNIT WT — SHEET 1 OF 6

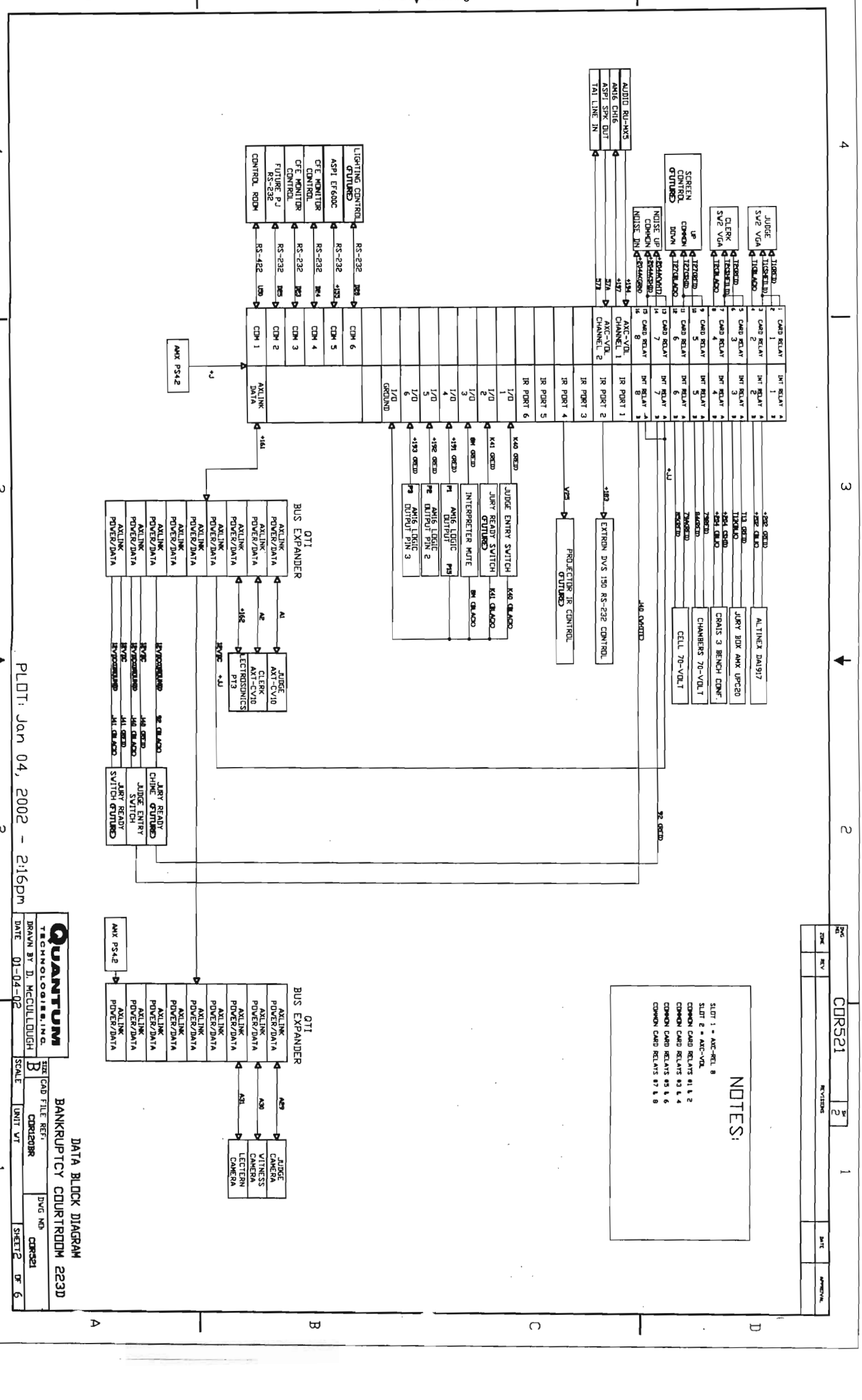

NOTES:

SLOT 1 = AXC-REL 8
SLOT 2 = AXC-VDL
COMMON CARD RELAYS #1 & 2
COMMON CARD RELAYS #3 & 4
COMMON CARD RELAYS #5 & 6
COMMON CARD RELAYS #7 & 8

DWG NO	COR521	REV 2
ZONE	REVISIONS	
REV		DATE
		APPROVAL

DATA BLOCK DIAGRAM
BANKRUPTCY COURTROOM 223D

QUANTUM TECHNOLOGIES, INC.

DRAWN BY D. McCULLOUGH	SIZE B	CAD FILE REF: COR120BR	DWG NO COR521
DATE 01-04-02	SCALE	UNIT VT	SHEET 2 OF 6

PLOT: Jan 04, 2002 - 2:16pm

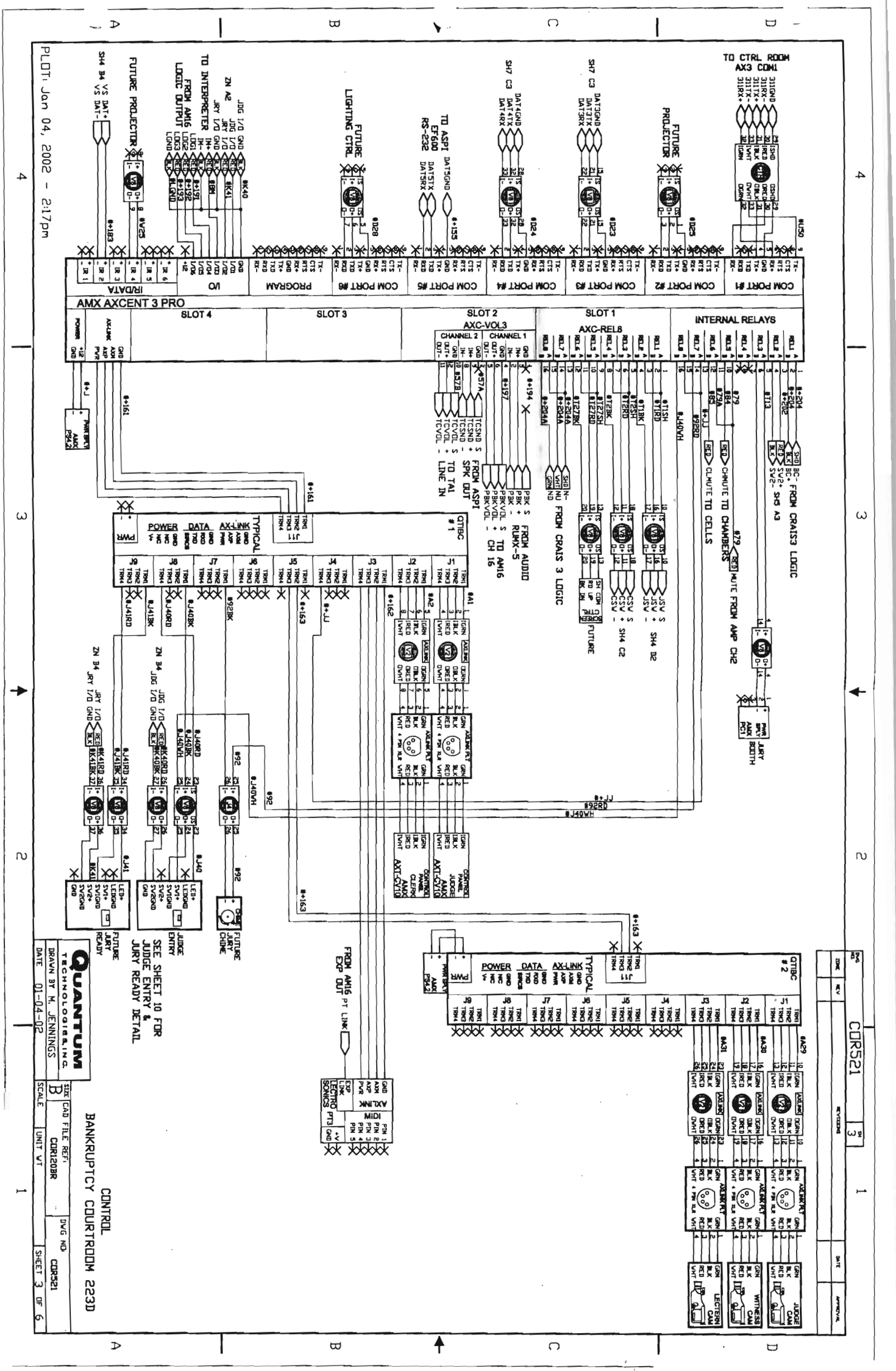
TO CTRL ROOM AX3 COM1
FUTURE PROJECTOR
TO ASP1 EF600 RS-232
FUTURE LIGHTING CTRL
TO INTERPRETER
FROM AM16 LOGIC OUTPUT
FUTURE PROJECTOR
COM PORT #1
COM PORT #2
COM PORT #3
COM PORT #4
COM PORT #5
COM PORT #6
PROGRAM
I/O
IR/DATA
AMX AXCENT 3 PRO
SLOT 4
SLOT 3
SLOT 2
AXC-VOL3
SLOT 1
AXC-REL8
INTERNAL RELAYS
CHANNEL 2
CHANNEL 1
TO TAI LINE IN
FROM ASPI SPK OUT
FROM AUDIO RUMX-5
TO AM16 CH 16
FROM CRAIS 3 LOGIC
BC- FROM CRAIS3 LOGIC
BC+ SV2+ SV2- SH5 A3
CHMUTE TO CHAMBERS
MUTE FROM AMP CH2
CLMUTE TO CELLS
JURY BOOTH
FUTURE
CSV S
CSV + SH4 C2
CSV -
JSV S
JSV + SH4 I2
JSV -
QTBBC #1
QTBBC #2
POWER
DATA
AX-LINK
TYPICAL
FROM AM16 EXP OUT
SEE SHEET 10 FOR JUDGE ENTRY & JURY READY DETAIL
FUTURE JURY CHIME
FUTURE JURY READY
JUDGE ENTRY
CONTROL
BANKRUPTCY COURTROOM 223D
QUANTUM
TECHNOLOGIES, INC.
DRAWN BY M. JENNINGS
DATE 01-04-02
SIZE B
CAD FILE REF. CDR120B
SCALE
UNIT VT
DWG NO CDR521
SHEET 3 OF 6
PLOT: Jan 04, 2002 - 2:17pm
CDR521

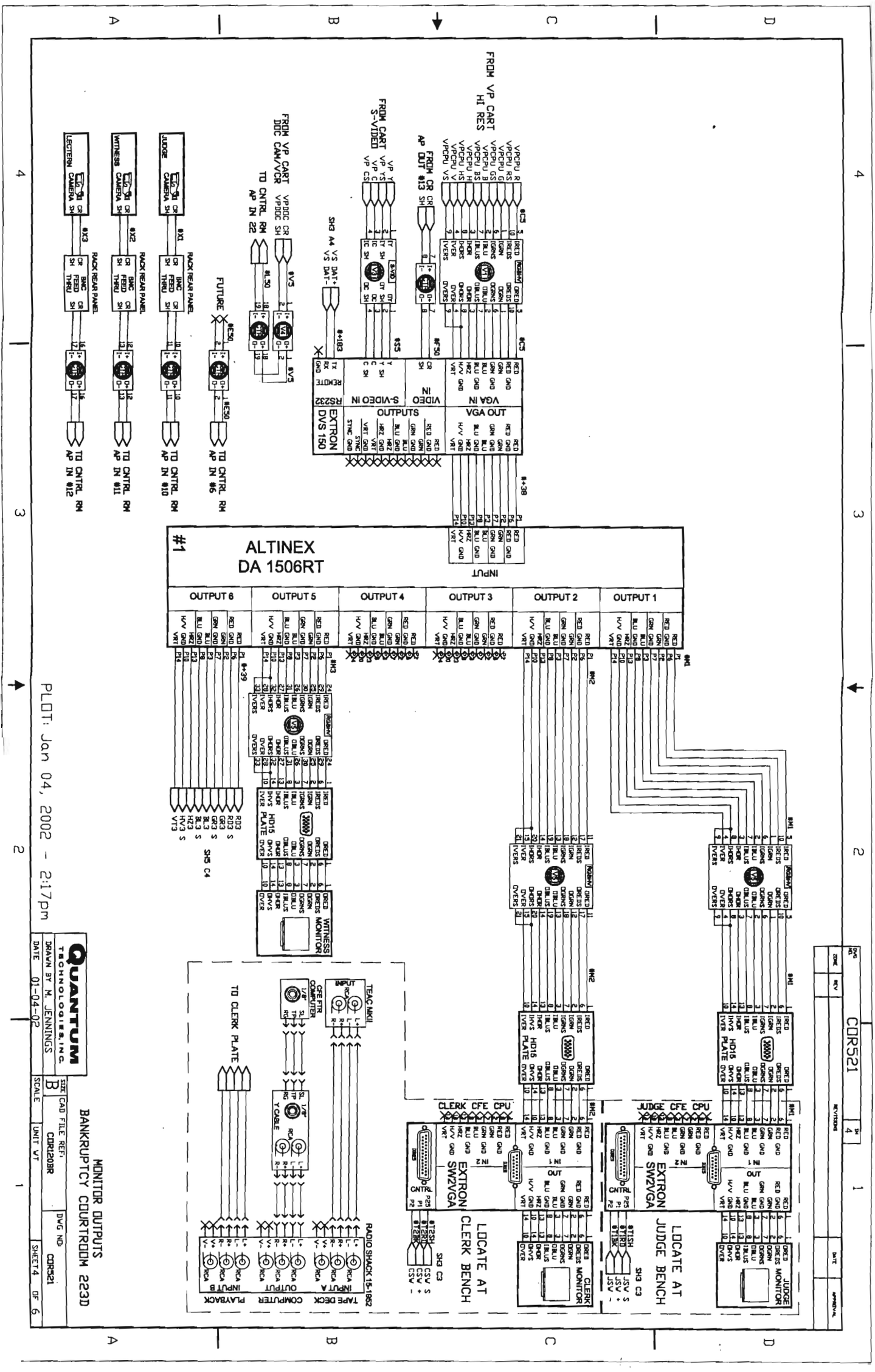
MONITOR OUTPUTS
BANKRUPTCY COURTROOM 223D
QUANTUM TECHNOLOGIES, INC.
DRAWN BY M. JENNINGS
DATE 01-04-02
SIZE B
CAD FILE REF: CDR120BR
DWG NO: CDR521
SCALE
UNIT VT
SHEET 4 OF 6
PLOT: Jan 04, 2002 - 2:17pm
CDR521
ALTINEX DA 1506RT
#1
INPUT
OUTPUT 1
OUTPUT 2
OUTPUT 3
OUTPUT 4
OUTPUT 5
OUTPUT 6
EXTRON DVS 150
VGA IN
VIDEO IN
S-VIDEO IN
RS232
VGA OUT
OUTPUTS
FROM VP CART HI RES
FROM CART S-VIDEO
FROM CR AP OUT #13
FROM VP CART DOC CAM/VCR
TO CNTRL RM AP IN 22
FUTURE
LECTERN CAMERA
WITNESS CAMERA
JUDGE CAMERA
RACK REAR PANEL
BNC FEED THRU
TO CNTRL RM AP IN #12
TO CNTRL RM AP IN #11
TO CNTRL RM AP IN #10
TO CNTRL RM AP IN #6
HD15 DVI PLATE
WITNESS MONITOR
JUDGE MONITOR
CLERK MONITOR
LOCATE AT JUDGE BENCH
LOCATE AT CLERK BENCH
EXTRON SW2VGA
JUDGE CFE CPU
CLERK CFE CPU
TEAC MKII
CFE FTR COMPUTER
TO CLERK PLATE
TAPE DECK
COMPUTER
PLAYBACK
INPUT A
OUTPUT
INPUT B
RADIO SHACK 15-1962

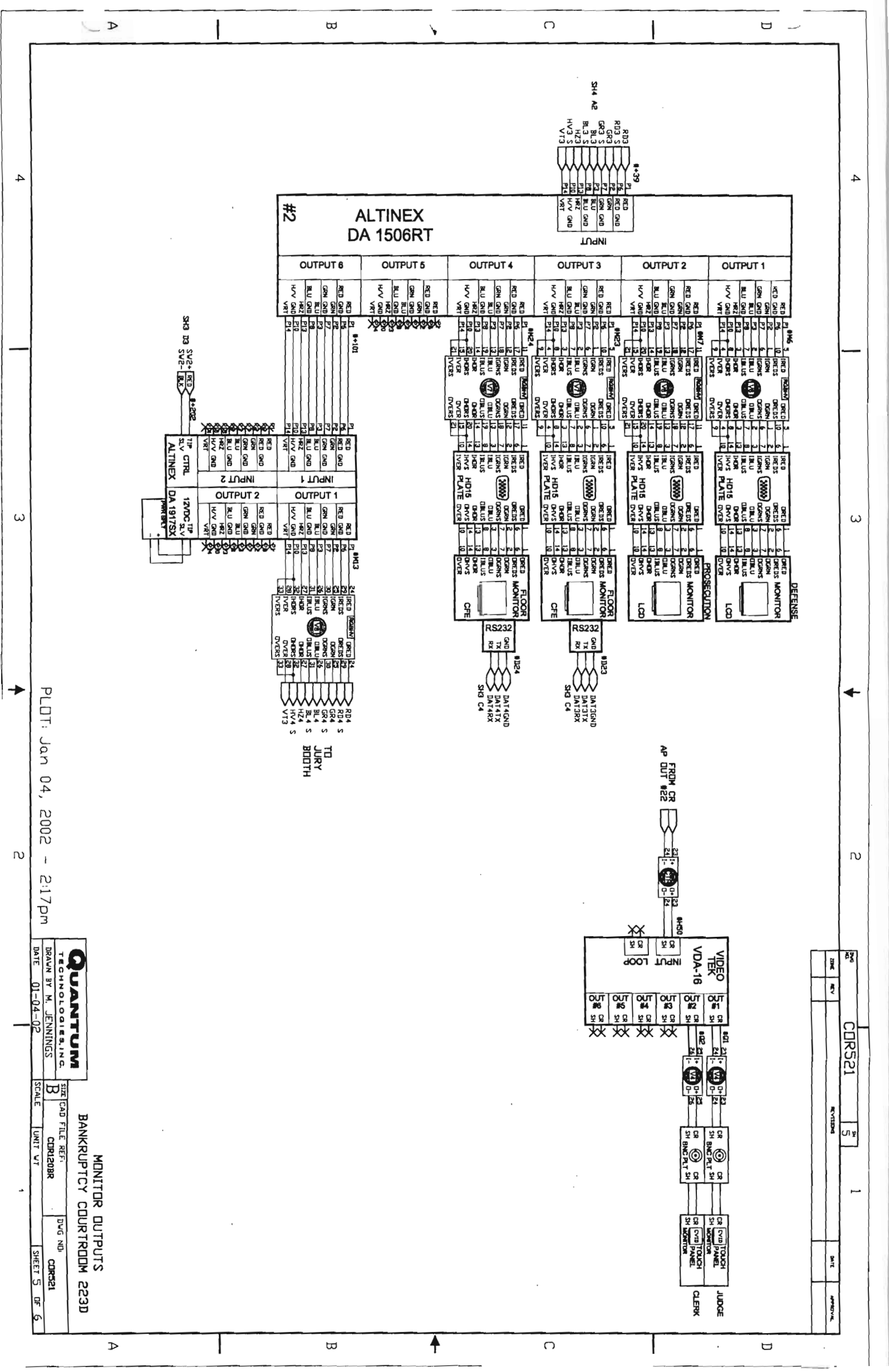
#2
ALTINEX
DA 1506RT
OUTPUT 6
OUTPUT 5
OUTPUT 4
OUTPUT 3
OUTPUT 2
OUTPUT 1
INPUT
DEFENSE
PROSECUTION
FLOOR MONITOR
HD15 PLATE
RS232
CFE
LCD
ALTINEX
DA 1917SX
INPUT 1
INPUT 2
12VDC TIP SLV
TIP SLV CTRL
TO JURY BOOTH
FROM CR AP OUT #22
VIDEO TEK
VDA-16
LOOP
BNC PLT
TOUCH PANEL
MONITOR
JUDGE
CLERK
CDR521
MONITOR OUTPUTS
BANKRUPTCY COURTROOM 223D
QUANTUM
TECHNOLOGIES,INC.
DRAWN BY M. JENNINGS
DATE 01-04-02
CAD FILE REF:
CDR1208R
DWG NO:
CDR521
SCALE
UNIT VT
SHEET 5 OF 6
PLOT: Jan 04, 2002 - 2:17pm

As Built Drawings

DWG NO.	COR521	SH 6

ZONE	REV	REVISIONS	DATE	APPROVAL

NOTES:
1. POWER SUPPLY: 12 - 24VDC, 400 m.a. (min).
   RECOMMEND RADIO DESIGN LABS P/N PS-24A
2. USE 1K RESISTOR FOR 12V PWR, 2K FOR 24V PWR.

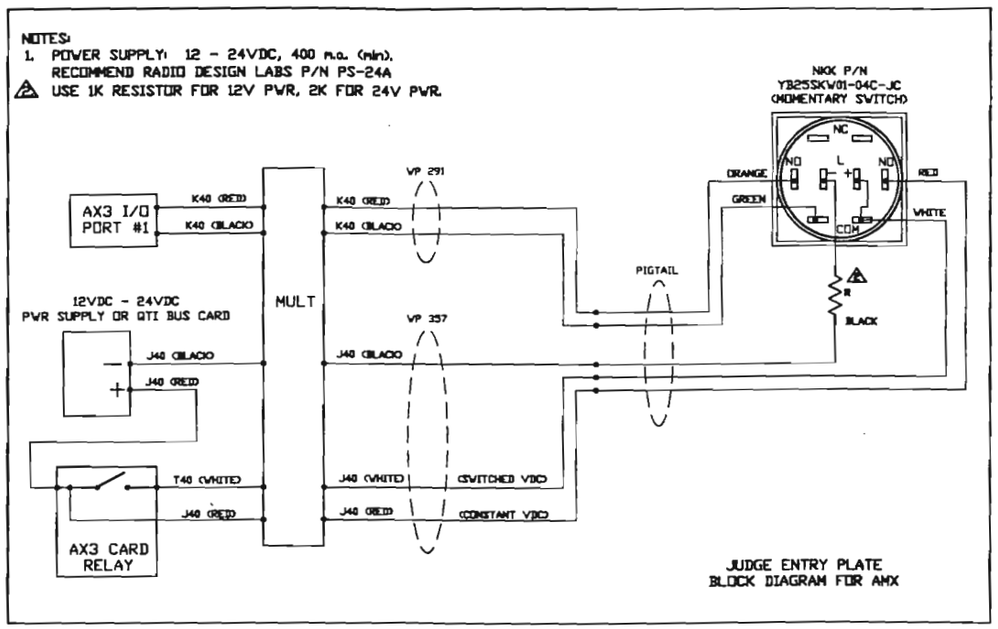

JUDGE ENTRY PLATE
BLOCK DIAGRAM FOR AMX

NOTES:
1. POWER SUPPLY: 12 - 24VDC, 400 m.a. (min).
   RECOMMEND RADIO DESIGN LABS P/N PS-24A
2. USE 1K RESISTOR FOR 12V PWR, 2K FOR 24V PWR.

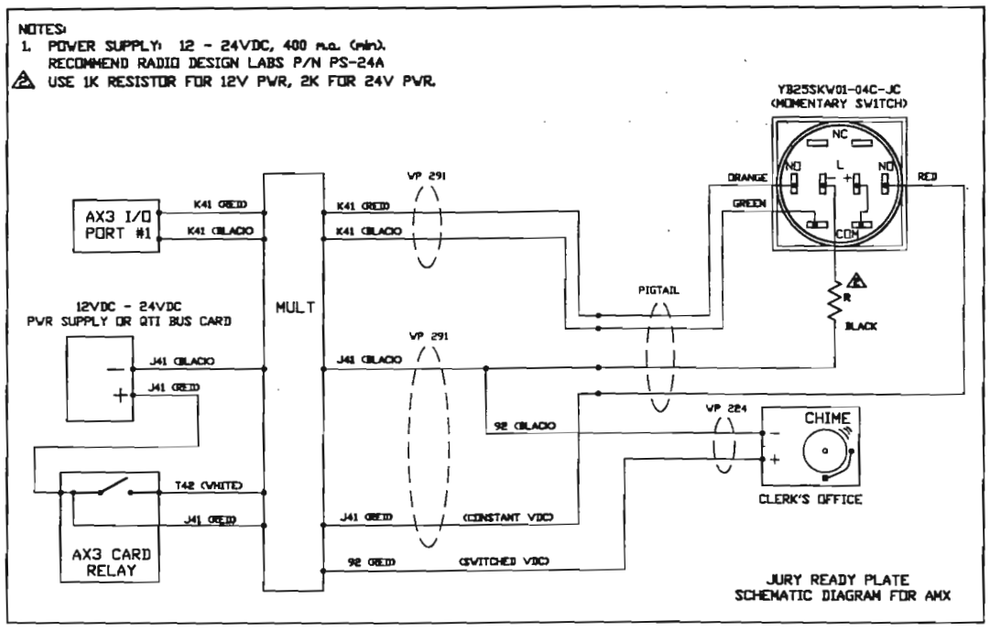

JURY READY PLATE
SCHEMATIC DIAGRAM FOR AMX

PLOT: Jan 04, 2002 - 2:17pm

QUANTUM TECHNOLOGIES, INC.			
DRAWN BY M. JENNINGS	SIZE B	CAD FILE REF: COR120BR	DWG NO: COR521
DATE 01-04-02	SCALE	UNIT VT	SHEET 6 OF 6

CALL SYSTEMS DETAIL
BANKRUPTCY COURTROOM 223D