PUBLIC NOTICE

REQUEST FOR PROPOSALS FOR PROFESSIONAL SERVICES TO PROVIDE AND INTEGRATE COURTROOM TECHNOLOGY FOR THE SOUTHERN DISTRICT OF TEXAS

Public Notice is hereby given that the United States District Court, Southern District of Texas, is soliciting 2nd Amended Request for Proposal (RFP) responses for professional services to provide and install a complete video conference solution and projector in a Bankruptcy Courtroom.

This 2nd Amended RFP is available in electronic form at the following link:

Interested vendors shall submit the proposals to the Contracting Officer no later than 12 Noon CDT on Thursday, August 25th, 2011. The proposals may be delivered by Express Delivery, Certified or Registered U.S. Mail or by hand to:

Mailing address:
United States District Court
Attn: Contracting Officer
P.O. Box 61010
Houston, TX 77208

Physical address:
United States District Court
Attn: Contracting Officer
515 Rusk Street, Room 5008
Houston, TX 77002

The proposals may be delivered electronically to:
Damon_Barrett@txs.uscourts.gov

Respondent bears the risk of late delivery.

END OF PUBLIC NOTICE

UNITED STATES DISTRICT COURT

SOUTHERN DISTRICT OF TEXAS

Request for Quotation

RFQ Number: 2nd Amended RFQ CRP BJRS
Request Date: August 19, 2011

To:
Interested Vendors

Special Notes: Under the Service Contract Act (SCA), federal agencies, including the judiciary, must require contractors to pay their employees while performing nonprofessional support services on a federal contract in excess of $2,500.00 a prevailing wage (including salaries and fringe benefits) within the industry at the location where the work is to be performed as determined by the Department of Labor.

Please see attached "Notice to Employees Working on Government Contracts" in accordance to the Clause 3-160 "Service Contract Act of 1965".

For further information please visit www.wdol.gov/index.html

This is a request for Open Market Pricing.

All items should be quoted F.O.B. Destination

Quotes may be faxed or e-mailed to the below listed address by (*08/25/11 12:00 P.M. CST)*
However, hand carried quotes are to be delivered by the same time at (*08/25/11 12:00 P.M. CST)*
Submit a quotation by using the attached quote sheet.

A fixed price award from this RFQ will be made based on the lowest price, technically acceptable offer.

Quotes and questions concerning this RFQ should be addressed to *Damon Barrett* at the US District Court:

Physical Address	Mailing Address
515 Rusk Street, Rm. 5008	PO Box 61010
Houston, Texas 77002	Houston, Texas 77208

Phone: 713/250-5935 Fax: 713/250-5671
Email Address: Damon_Barrett@txs.uscourts.gov

The **delivery address** for this purchase will be:

United States District Court
1133 North Shoreline Blvd
Corpus Christi, TX 78401

“Statement of Work”

1. Description
Provide and integrate a video conference solution and projector into an existing audio/video solution and update the existing AMX programming into a Bankruptcy Courtroom in Corpus Christi, Texas.

1.1 Introduction
The United States Bankruptcy Court in Corpus Christi, Tx is updating the video conference solution and adding a projector to an existing audio/video solution. The current video codec is located in a control room and will be disconnected from this courtroom.

1.2 Purpose
Obtain an outside contractor to provide and install a complete video conference solution and projector in a Bankruptcy Courtroom. Prior experience installing a complete audio/video solution for a U.S. District, Magistrate, Bankruptcy or an equivalent installation to include audio, video, IR emitters, video conferencing, FTR Recorder, and AMX control is preferred.

1.3 Scope

Provide and integrate a projector and video conference solution into an existing audio/video system in a bankruptcy courtroom in Corpus Christi, TX. Quote to include all equipment, cabling, terminations, plates and connectors. Quote should also include updating existing programming of AMX courtroom automation programming.

The video conference should be controlled by the touch panel and configured to allow for two cameras to be seen on the far end (not simultaneously). It should be able to send evidence to the far end as well as multipoint. The cameras will be installed in pockets where there are existing cameras. The old cameras need to be removed, and new wiring will need to be installed to the control rack located in the A/V closet where the Codec will be installed. AMX programming of the video conference will need to be integrated into an existing AMX control system to have full remote control functionality. Audio should integrate into the audio system utilizing the existing microphones and speakers. Video should integrate into existing video system utilizing monitors and projector. ISDN lines will be provided at the A/V rack by the courts. Presets need to be configured for Judge, Witness and Lectern.

The projector should be installed in the projector pocket where new cabling will be required. AMX programming of the projector will need to be integrated into an existing AMX control system to have full remote control functionality. Projector should be connected to the video distribution amplifier as an additional monitor to show evidence at all times. Programming should allow time for cool down before allowing button to re-engage power cycle to on. AMX touch panels should display lamp hours. The distance from the projector pocket to the screen will require a throw lens.

Contractor Provided Equipment:

1	Polycom HDX8000/720 w/Rack Hardware **or Equal**
1	Quad BRI module for HDX8000/720 **or Equal**
2	Polycom Camera for HDX8000/720 **or Equal**
1	Triple NT1 for ISDN termination
1	Sanyo PLC XP57 or Equal

Court Provided Equipment

1	Sanyo LNS-T31A Throw Lens to achieve 40'**or Equal**

1.4 Contractor Requirements
The contractor must have prior experience installing a complete audio/video solution using IR emitters, video conferencing, FTR Recorder, and AMX .

Contractor must have the following certifications:
AMX, Polycom, and Extron

2. Description of Deliverables
Demonstrate a working audio/video solution approved by the Court, complete with audio/video, video conferencing, teleconferencing, FTR Recorder, AMX control and IR emitters for interpretation and hearing impaired according to requirements by the Court.

Location
United States District Court
1133 N. Shoreline Blvd
Corpus Christi, Tx 78401

Schedule Dates
Work to start no later than _____ and finish no later than _____.

Review and Acceptance
Acceptance based on final walk through and testing upon job completion with USDC COTR, Darren Berglan. Contractor will have five (5) business days to correct any deficiencies.

3.0 Contacts

The following contacts are provided by the court to the vendor:

Contracting Officer (CO)
Marrianne Still (713) 250-5353

Procurement Specialist (PS)
Damon Barrett (713) 250-5935

Contracting Officer's Technical Representative (COTR)
Darren Berglan (713) 250-5435

PURCHASE ORDER TERMS AND CONDITIONS
Provisions and Clauses

I. REQUIRED PROVISIONS AND CLAUSES FOR ALL OPEN MARKET SMALL PURCHASES

1) Provision B-1, Solicitation Provisions Incorporated by Reference (AUG 2004)

This solicitation incorporates one or more solicitation provisions by reference, with the same force and effect as if they were given in full text. Upon request, the contracting officer will make their full text available. The offeror is cautioned that the listed provisions may include blocks that must be completed by the offeror and submitted with its quotation or offer. In lieu of submitting the full text of those provisions, the offeror may identify the provision by paragraph identifier and provide the appropriate information with its quotation or offer. Also, the full text of a solicitation provision may be accessed electronically at this address:
http://www.uscourts.gov/procurement/clauses.htm

2) Clause B-5 Clauses Incorporated by Reference (OCT 2006)

This procurement incorporates one or more clauses by reference, with the same force and effect as if they were given in full text. Upon request, the contracting officer will make their full text available. Also, the full text of a clause may be accessed electronically at this address: http://www.uscourts.gov/procurement/clauses.htm

3) The following clauses are included by reference:

Clause 3-3, Provisions, Clauses, Terms and Conditions - Small Purchases (JAN 2010)

Clause 3-160, Service Contract Act of 1965, as amended (JAN 2003)

Wage Rate Determination

(If estimated cost is over $2,500, attach the Department of Labor wage rate determination here.)

4) Provision 3-5, Taxpayer Identification (JAN 2003)

(a) *Definitions.*
"Common parent," as used in this provision, means that corporate entity that owns or controls an affiliated group of corporations that files its federal income tax returns on a consolidated basis, and of which the offeror is a member.
"Taxpayer Identification (TIN)," as used in this provision, means the number required by the Internal Revenue Service (IRS) to be used by the offeror in reporting income tax and other returns. The TIN may be either a social security number or an employer identification number.
(b) All offerors shall submit the information required in paragraphs (d) through (f) of this provision to comply with debt collection requirements of 31 U.S.C. 7701(c) and 3325(d), reporting requirements of 26 U.S.C. 6041, 6041A and 6050M, and implementing regulations issued by the IRS. If the resulting contract is subject to the payment reporting requirements, the failure or refusal by the offeror to furnish the information may result in a 31 percent reduction of payments otherwise due under the contract.
(c) The TIN may be used by the government to collect and report on any delinquent amounts arising out of the offeror's relationship with the government (31 U.S.C. 7701(c)(3). If the resulting contract is subject to payment recording requirements, the TIN provided hereunder may be matched with IRS records to verify the accuracy of the offeror's TIN.
(d) *Taxpayer Identification Number (TIN):*
_____
[ ] TIN has been applied for.
[ ] TIN is not required, because:_____
_____
[ ] Offeror is a nonresident alien, foreign corporation or foreign partnership that does not have income effectively connected with the conduct of a trade or business in the United States and does not have an office or place of business or a fiscal paying agent in the United States;

[ ] Offeror is an agency or instrumentality of a foreign government;
[ ] Offeror is an agency or instrumentality of the federal government.
(e) *Type of organization:*
[ ] sole proprietorship;
[ ] partnership;
[ ] corporate entity (not tax-exempt);
[ ] corporate entity (tax-exempt);
[ ] government entity (federal, sate or local);
[ ] foreign government;
[ ] international organization per-26 CFR 1.6049-4;
[ ] other _____.
(f) *Common parent.*
[ ] Offeror is not owned or controlled by a common parent as defined in paragraph (a) of this provision.
Name and TIN of common parent
Name _____
TIN _____

As Built Drawings

DWG NO	SH
COR121	1

ZONE	REV	REVISIONS	DATE	APPROVAL

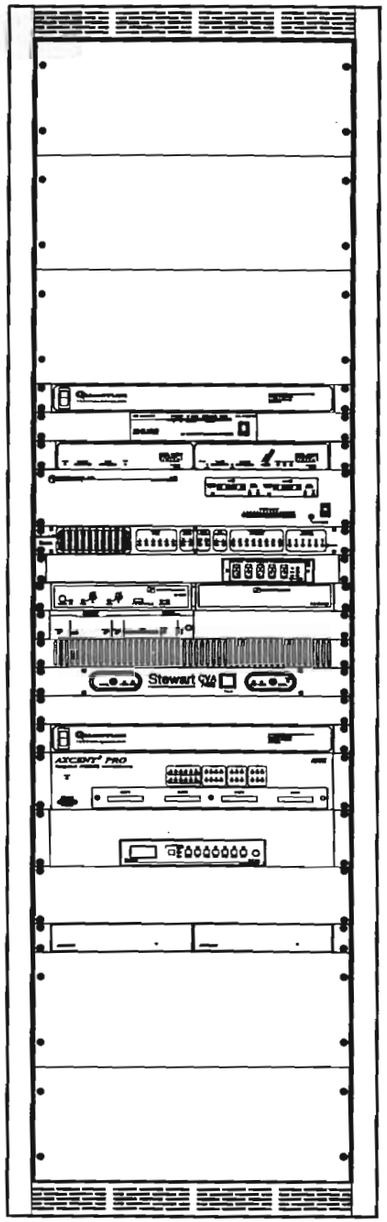

4RU VENT PANEL

4RU VENT PANEL

4RU VENT PANEL

QUANTUM TECHNOLOGIES QTI1511 POWER DISTRIBUTION MODULE

SHURE SC14/84 WIRELESS SYSTEM

ASPI EF600 TELECONFERENCING

LECTROSONICS AM16 MIXER

QUANTUM TECHNOLOGIES CRAIS 3 MULTI-FUNCTION ANALOG UNIT

RDL RU-MX5 MIXER w/ 1RU SHELF

SENNHEISER SI1015 I/R RECEIVER, w/ GA1013-CC

SHURE DFR11EQ-5 DIGITAL EQUALIZER

1RU VENT PANEL

STEWART CVA7400 POWER AMPLIFIER

1RU BLANK

QUANTUM TECHNOLOGIES QTI1511 POWER DISTRIBUTION MODULE

AMX AXCENT3 PRO, INTEGRATED ACCESS CONTROLLER

EXTRON DVS-150 VIDEO SCALER

2RU BLANK

ALTINEX DA1506 DISTRIBUTION AMPLIFIER (x2)

4RU VENT PANEL

4RU VENT PANEL

ALTAS WA100-70B EQUIPMENT RACK w/ CS-HDPR CASTER

INTERNAL RACK EQUIPMENT

AUDIO COMPONENTS

LECTROSONICS TA1 LINE LEVEL ADAPTER
1 EA. RDL ST-SSR1 SOLID STATE RELAY
1 EA. RDL ST-MX3 LINE LEVEL MIXER
3 EA. RDL PS24A POWER SUPPLIES

VIDEO COMPONENTS

LECTROSONICS PT3 PROTOCOL TRANSLATOR
LECTROSONICS VI24 VIDEO SWITCHER INTERFACE
AMX PS4.2 (x2) POWER SUPPLY
VIDEOTEK VDA16 VIDEO DA

PLOT: Jan 04, 2002 - 2:14pm

AS BUILT

UNLESS OTHERWISE SPECIFIED

INTERPRET PER DOD-STD-100

THREADS PER ANSI Y14.6

REMOVE ALL BURRS AND BREAK ALL SHARP EDGES

IDENTIFY BY BAG & OR TAG PER MIL-STD-130

SURFACE FINISH 125

DIMENSIONAL TOLERANCES ON (PER ANSI Y14.5)

MILLIMETERS	DECIMALS	ANGLES
XX ± ——	XX ± 0.01	
XXX± ——	XXX± 0.008	

MATERIAL

FINISH

DFTSMN	K. JOHNSON	01-04-02
DSGN		
ALD ENGR	G. SMOBY	01-04-02
VID ENGR	B. MCCULLOUGH	01-04-02
MCH ENGR		
MFG		

CONTRACT NO.

DESIGN APPROVAL

OTHER APPROVAL

QUANTUM TECHNOLOGIES, INC.

A/V RACK ELEVATION
BANKRUPTCY COURTROOM 223D
CORPUS CHRISTI, TX

SIZE	CAD FILE REF:	DWG NO:
B	COR120BR	COR121

SCALE | UNIT VT | SHEET 1 OF 2

As Built Drawings

DWG NO.	CDR121	SH 2

ZONE	REV	REVISIONS	DATE	APPROVAL

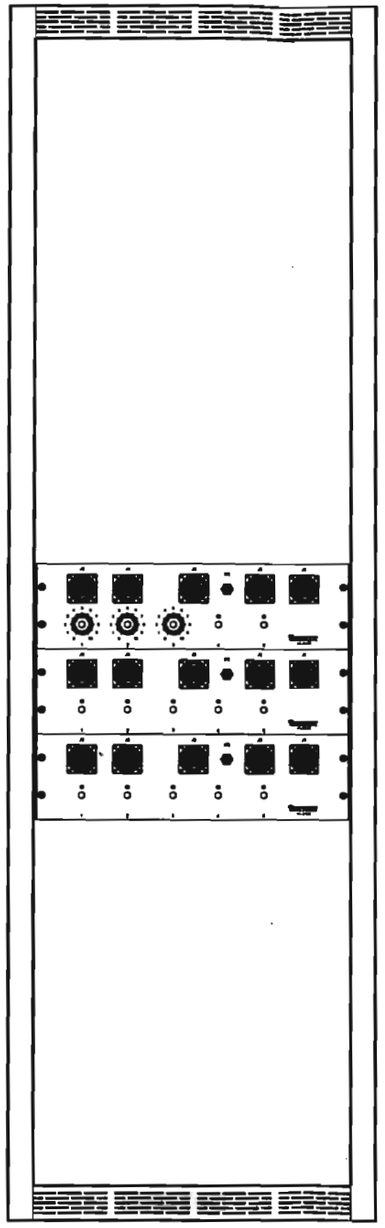

QUANTUM TECHNOLOGIES QTI1950 MULT PANEL w/ ATTENUATORS

QUANTUM TECHNOLOGIES QTI1950 MULT PANEL

QUANTUM TECHNOLOGIES QTI1950 MULT PANEL

ALTAS WA100-70B EQUIPMENT RACK w/ CS-HDPR CASTER

PLOT: Jan 04, 2002 - 2:14pm

QUANTUM TECHNOLOGIES, INC.

DRAWN BY M. JENNINGS

DATE 01-04-02

REAR RACK ELEVATION
BANKRUPCTY COURTROOM 223D

SIZE	CAD FILE REF:	DWG NO:
B	CDR120MAG	CDR121
SCALE	UNIT WT	SHEET 2 OF 2

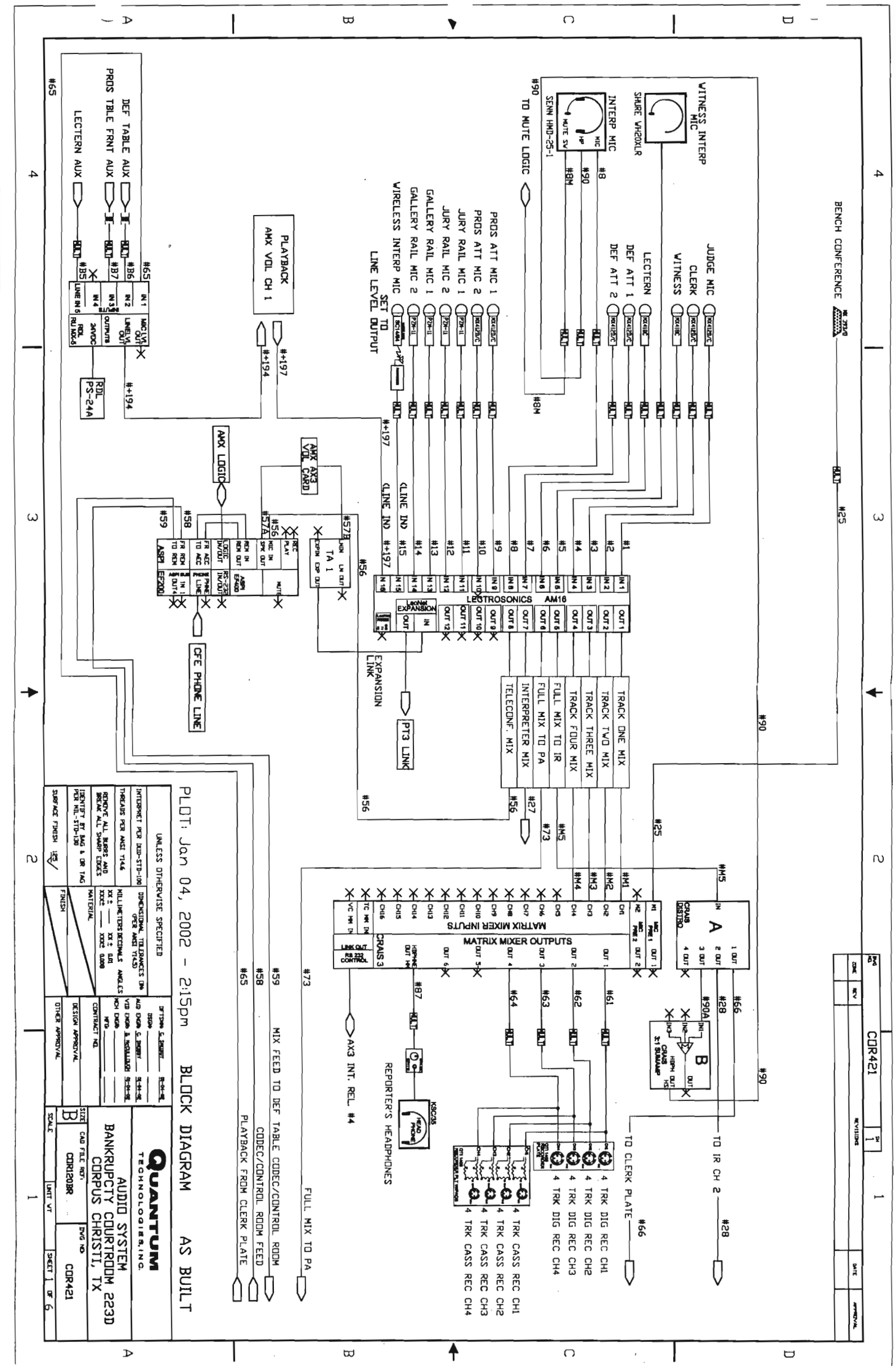
BENCH CONFERENCE
WITNESS INTERP MIC
SHURE VH20XLR
INTERP MIC
SENN HMD-25-1
TO MUTE LOGIC
JUDGE MIC
CLERK
WITNESS
LECTERN
DEF ATT 1
DEF ATT 2
PROS ATT MIC 1
PROS ATT MIC 2
JURY RAIL MIC 1
JURY RAIL MIC 2
GALLERY RAIL MIC 1
GALLERY RAIL MIC 2
WIRELESS INTERP MIC
SET TO LINE LEVEL OUTPUT
DEF TABLE AUX
PROS TBLE FRNT AUX
LECTERN AUX
RDL PS-24A
PLAYBACK AMX VOL CH 1
AMX LOGIC
AMX AX3 VOL CARD
TA 1
ASPI EF200
CFE PHONE LINE
LECTROSONICS AM16
EXPANSION LINK
PT3 LINK
TRACK ONE MIX
TRACK TWO MIX
TRACK THREE MIX
TRACK FOUR MIX
FULL MIX TO IR
FULL MIX TO PA
INTERPRETER MIX
TELECONF. MIX
MATRIX MIXER INPUTS
MATRIX MIXER OUTPUTS
CRAIS3
AX3 INT. REL. #4
REPORTER'S HEADPHONES
TO CLERK PLATE
TO IR CH 2
4 TRK DIG REC CH1
4 TRK DIG REC CH2
4 TRK DIG REC CH3
4 TRK DIG REC CH4
4 TRK CASS REC CH1
4 TRK CASS REC CH2
4 TRK CASS REC CH3
4 TRK CASS REC CH4
MIX FEED TO DEF TABLE CODEC/CONTROL ROOM
CODEC/CONTROL ROOM FEED
PLAYBACK FROM CLERK PLATE
FULL MIX TO PA
PLOT: Jan 04, 2002 - 2:15pm
BLOCK DIAGRAM
AS BUILT
QUANTUM TECHNOLOGIES, INC.
AUDIO SYSTEM
BANKRUPCTY COURTROOM 223D
CORPUS CHRISTI, TX
CDR421
CDR1203R

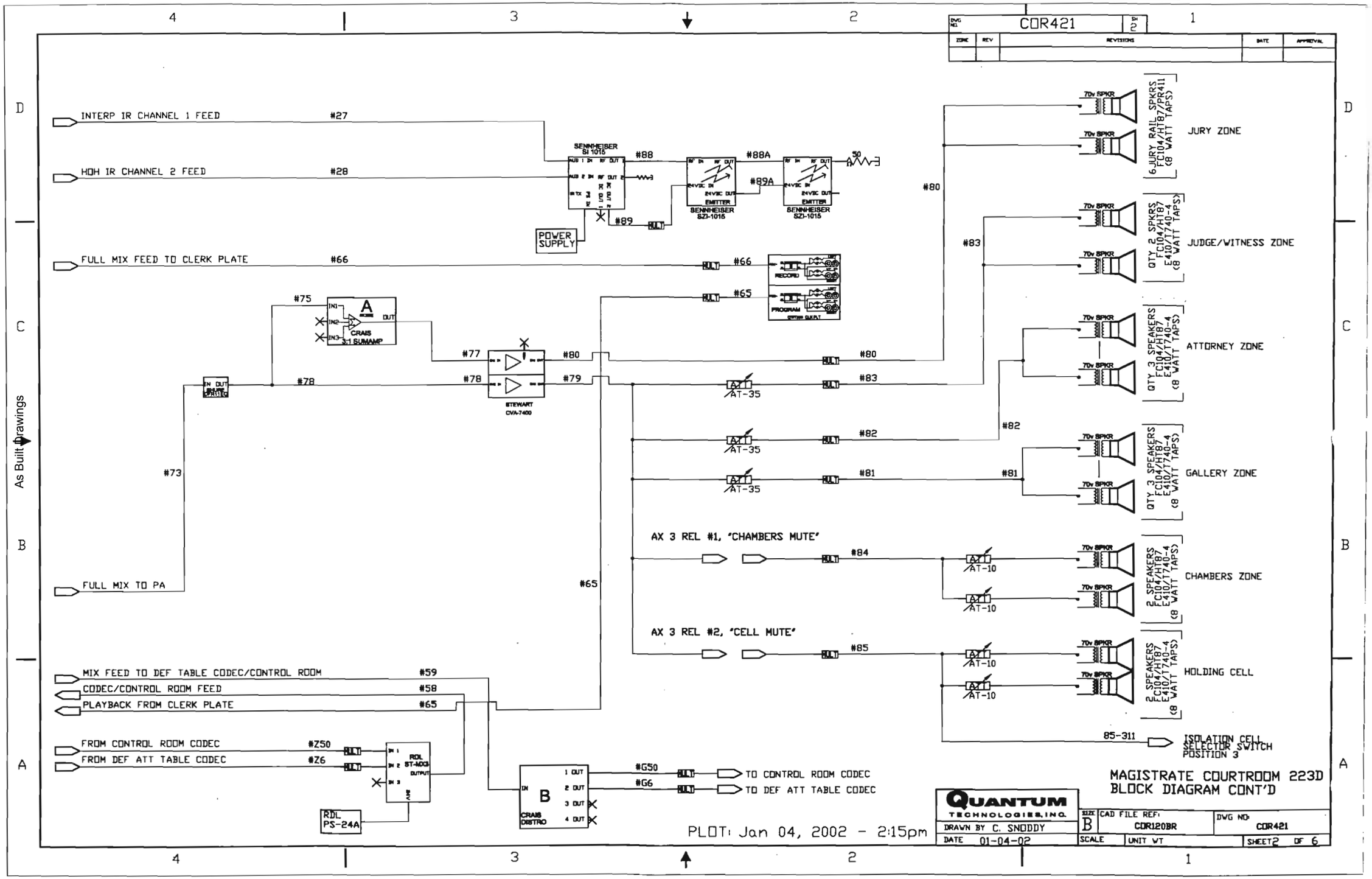

As Built Drawings

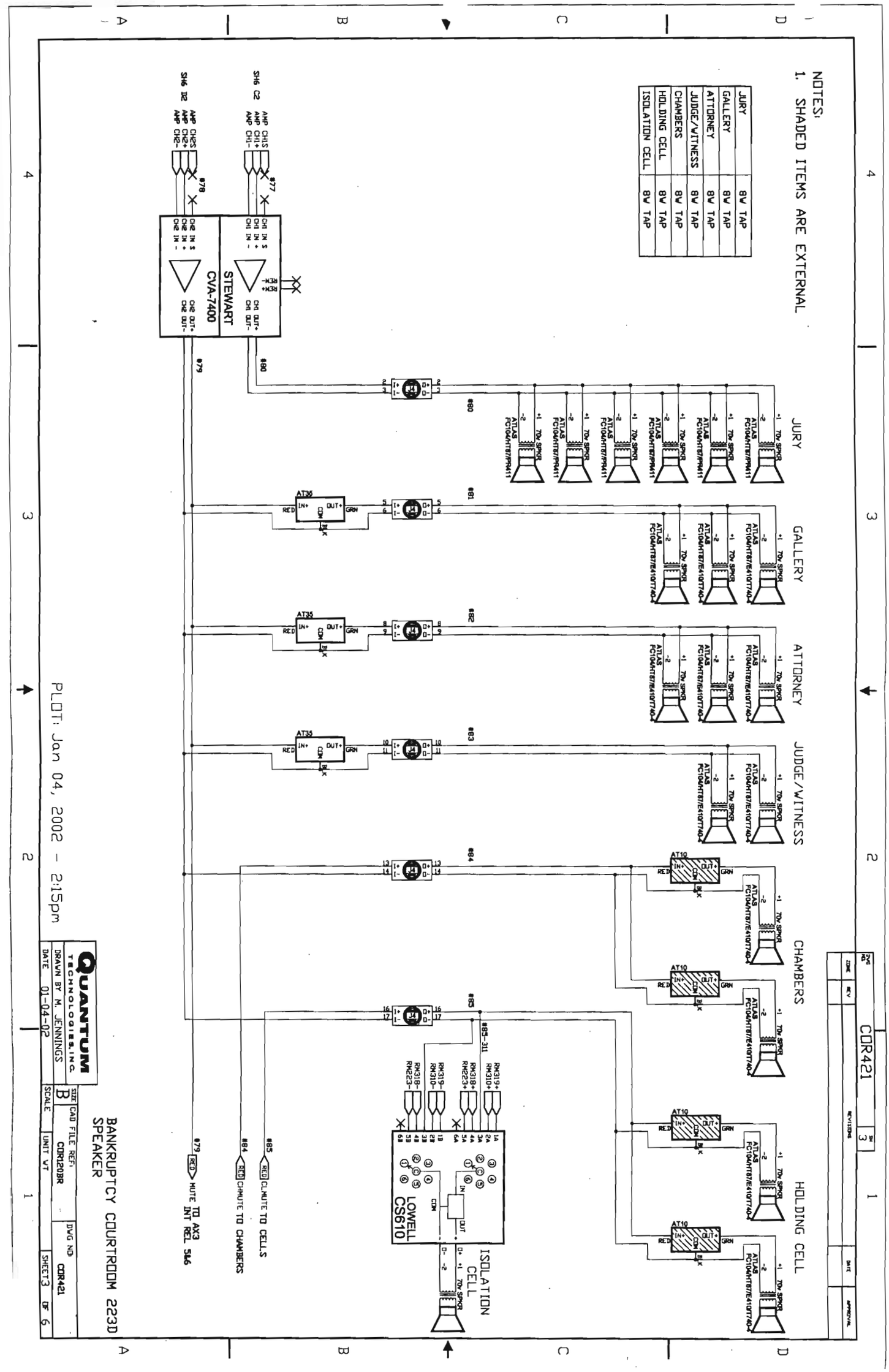
NOTES:
1. SHADED ITEMS ARE EXTERNAL
JURY 8V TAP
GALLERY 8V TAP
ATTORNEY 8V TAP
JUDGE/WITNESS 8V TAP
CHAMBERS 8V TAP
HOLDING CELL 8V TAP
ISOLATION CELL 8V TAP
STEWART CVA-7400
JURY
GALLERY
ATTORNEY
JUDGE/WITNESS
CHAMBERS
HOLDING CELL
ISOLATION CELL
LOWELL CS610
CHMUTE TO CELLS
CHMUTE TO CHAMBERS
MUTE TO AX3 INT REL 546
PLOT: Jan 04, 2002 - 2:15pm
QUANTUM TECHNOLOGIES, INC.
DRAWN BY M. JENNINGS
DATE 01-04-02
BANKRUPTCY COURTROOM 223D SPEAKER
CAD FILE REF: CDR120BR
DWG NO CDR421
SHEET 3 OF 6
CDR421

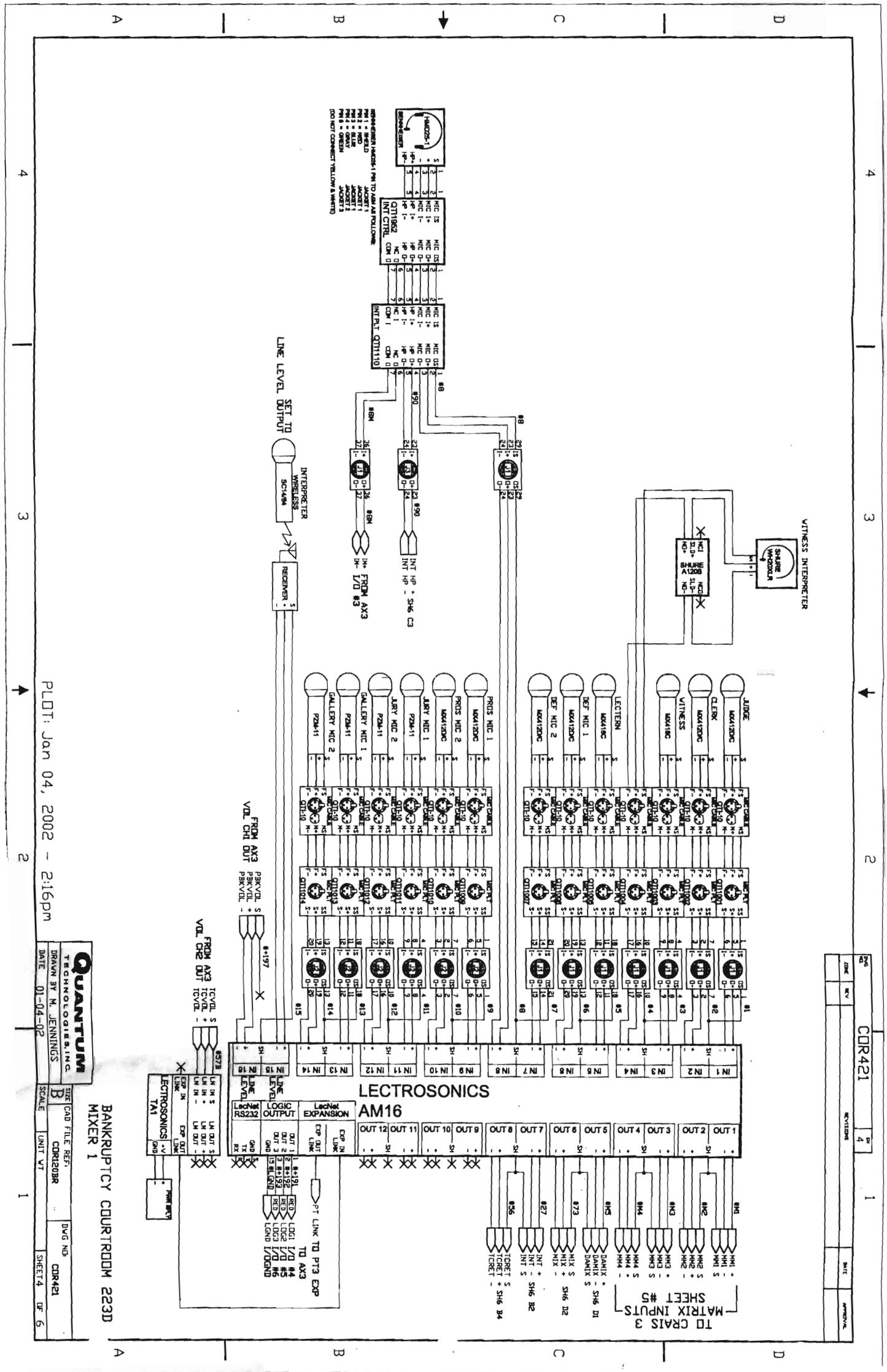
BANKRUPTCY COURTROOM 223D
MIXER 1
QUANTUM TECHNOLOGIES, INC.
DRAWN BY M. JENNINGS
DATE 01-04-02
PLOT: Jan 04, 2002 - 2:16pm
CDR421
LECTROSONICS
AM16
LECTROSONICS TA1
INTERPRETER WIRELESS SC140M
RECEIVER
LINE LEVEL SET TO OUTPUT
FROM AX3 VOL CH1 OUT
FROM AX3 VOL CH2 OUT
FROM AX3 I/O #3
INT HP + SH6 C3
INT HP - SH6 C2
VITNESS INTERPRETER
SHURE WH20DLR
SHURE A120S
JUDGE
CLERK
WITNESS
LECTERN
DEF MIC 1
DEF MIC 2
PROS MIC 1
PROS MIC 2
JURY MIC 1
JURY MIC 2
GALLERY MIC 1
GALLERY MIC 2
TO CRAIS 3 MATRIX INPUTS SHEET #5
PT LINK TO PT3 EXP
TO AX3
SHEET 4 OF 6

DWG NO. COR421 SH 5

ZONE	REV	REVISIONS	DATE	APPROVAL

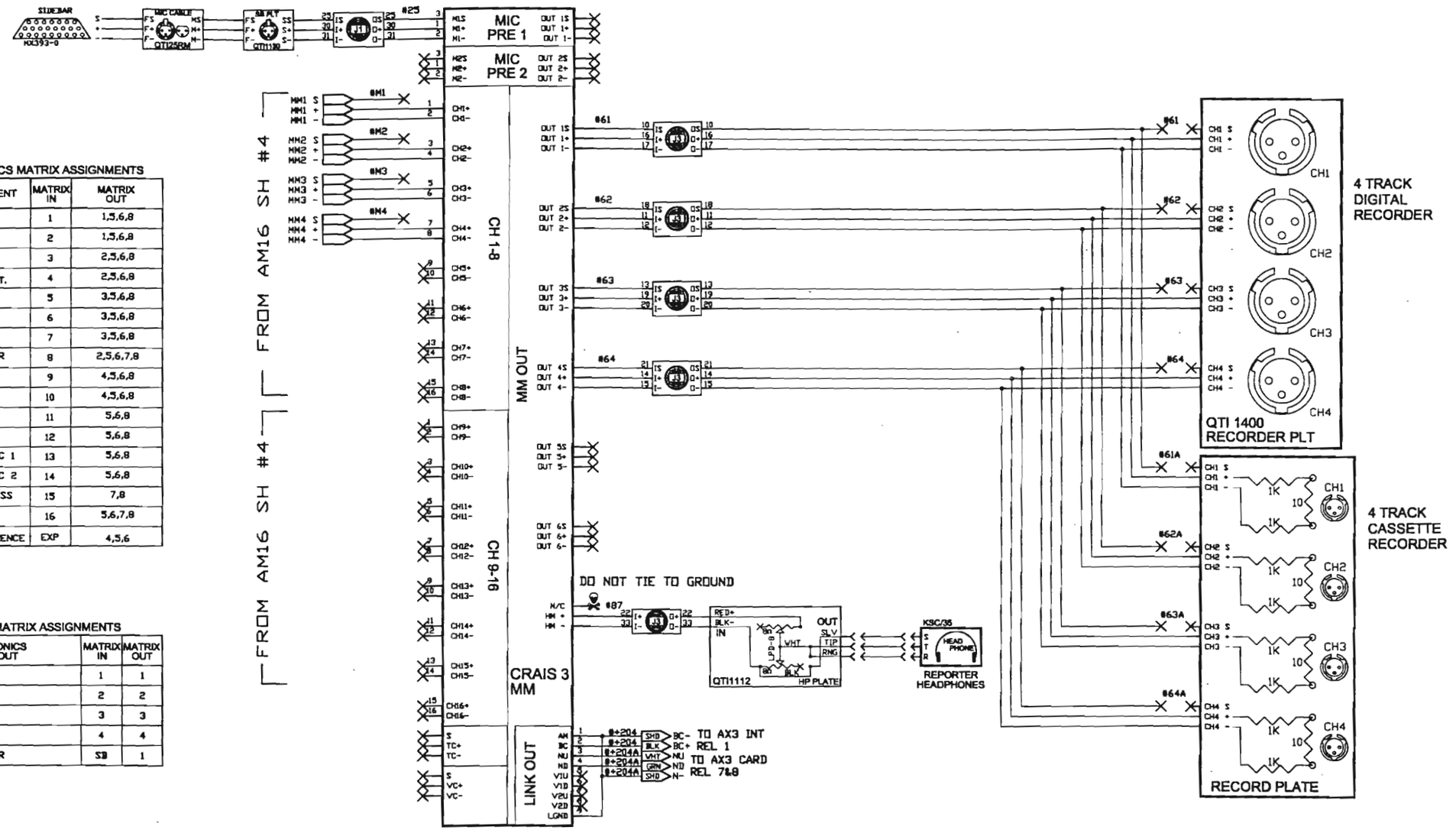

LECTROSONICS MATRIX ASSIGNMENTS

INPUT CH#	ASSIGNMENT	MATRIX IN	MATRIX OUT
1	JUDGE	1	1,5,6,8
2	CLERK	2	1,5,6,8
3	WITNESS	3	2,5,6,8
4	WITNESS INT.	4	2,5,6,8
5	LECTERN	5	3,5,6,8
6	DEF MIC 1	6	3,5,6,8
7	DEF MIC 2	7	3,5,6,8
8	INTERPRETER	8	2,5,6,7,8
9	PROS MIC 1	9	4,5,6,8
10	PROS MIC 2	10	4,5,6,8
11	JURY MIC 1	11	5,6,8
12	JURY MIC 2	12	5,6,8
13	GALLERY MIC 1	13	5,6,8
14	GALLERY MIC 2	14	5,6,8
15	INT. WIRELESS	15	7,8
16	PLAYBACK	16	5,6,7,8
-	TELECONFERENCE	EXP	4,5,6

CRAIS 3 MATRIX ASSIGNMENTS

LECTROSONICS MATRIX OUT	MATRIX IN	MATRIX OUT
1	1	1
2	2	2
3	3	3
4	4	4
SIDEBAR	SB	1

BANKRUPTCY COURTROOM 223D
MATRIX MIXER

PLOT: Jan 04, 2002 - 2:16pm

QUANTUM TECHNOLOGIES, INC.

DRAWN BY M. JENNINGS	SIZE B	CAD FILE REF: COR120BR	DWG NO: COR421
DATE 01-04-02	SCALE	UNIT WT	SHEET 5 OF 6

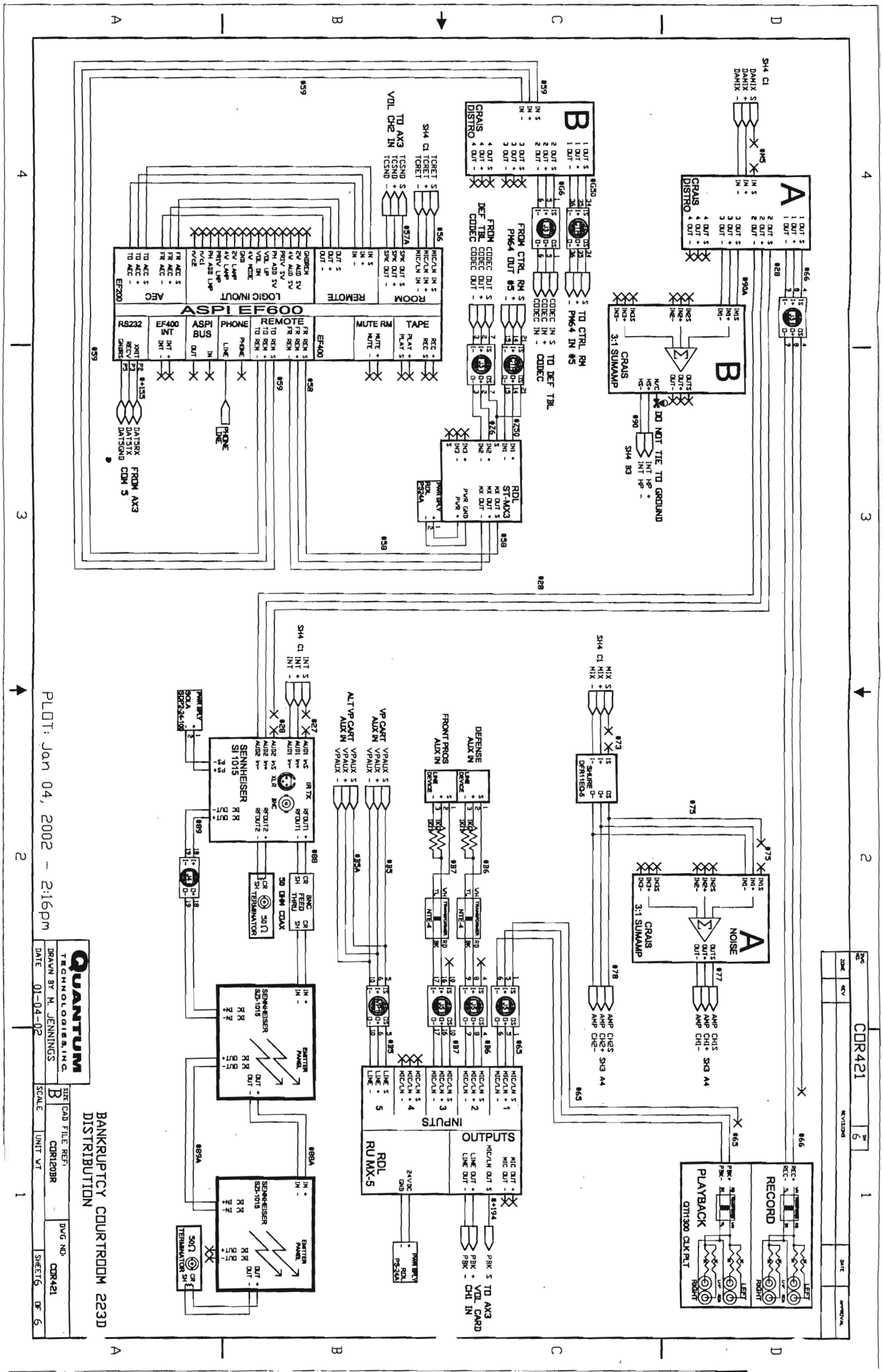
BANKRUPTCY COURTROOM 223D
DISTRIBUTION
QUANTUM TECHNOLOGIES, INC.
DRAWN BY M. JENNINGS
DATE 01-04-02
SIZE B
CAD FILE REF: CDR120BR
DWG NO: CDR421
SHEET 6 OF 6
PLOT: Jan 04, 2002 - 2:16pm
ASPI EF600
CRAIS DISTRIBO
CRAIS 3:1 SUMAMP
RDL ST-MX3
RDL RU MX-5
SENNHEISER SI 1015
SENNHEISER SZ2-1015
PLAYBACK
RECORD
INPUTS
OUTPUTS
REMOTE
ROOM
LOGIC IN/OUT
AEC
EF200
EF400
RS232
ASPI BUS
PHONE
TAPE
MUTE RM
DO NOT TIE TO GROUND
TO CTRL RM
TO DEF TRL
TO AX3 VOL CARD
FROM AX3 COM 5
50 OHM COAX
CDR421

DWG NO.	COR0102	SH 1

ZONE	REV	REVISIONS	DATE	APPROVAL

INTERNAL RACK EQUIPMENT

1 EA. LECTROSONICS TA1 LINE LEVEL ADAPTER
1 EA. LECTROSONICS PT3 PROTOCOL TRANSLATOR
1 EA. LECTROSONICS VI24 VIDEO SWITCHER INTERFACE
1 EA. RDL ST-SSR1 SOLID STATE RELAY
1 EA. RDL ST-MX3 LINE LEVEL MIXER
4 EA. RDL PS24A POWER SUPPLY
2 EA. AMX PS42 POWER SUPPLY
1 EA. VIDEOTEK VDA16 VIDEO DA

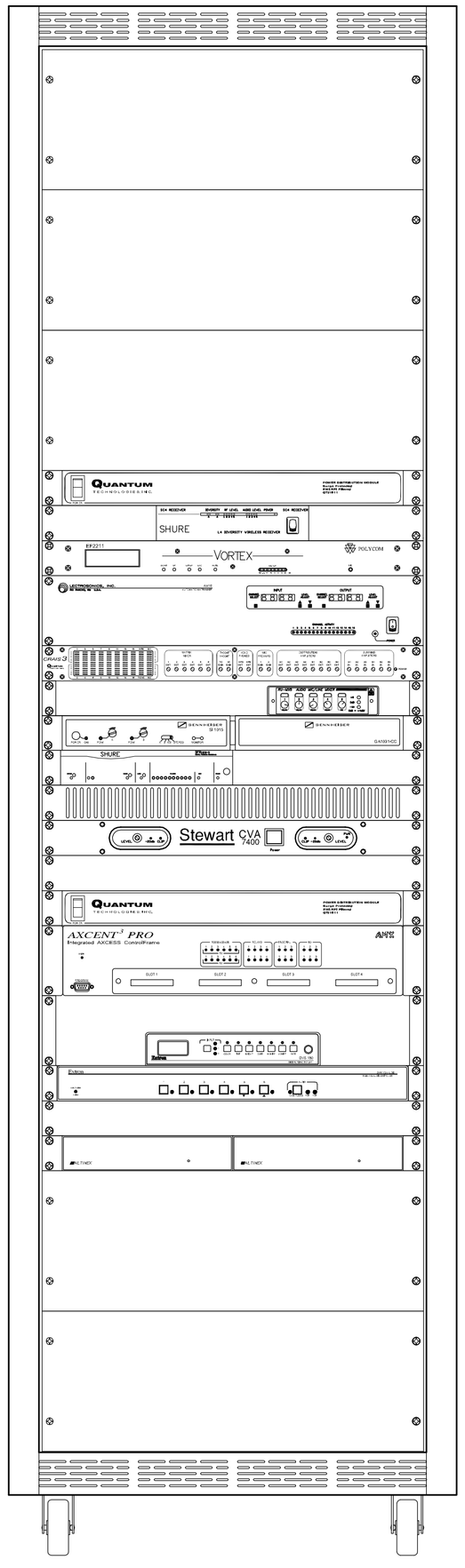

4RU VENT PANEL

4RU VENT PANEL

4RU VENT PANEL

QUANTUM TECHNOLOGIES QTI1511 POWER DISTRIBUTION MODULE

SHURE SC14/84 WIRELESS SYSTEM

NEW POLYCOM EF2211 TELECONFERENCE UNIT

LECTROSONICS AM16 MIXER

QUANTUM TECHNOLOGIES CRAIS 3 MULTI-FUNCTION ANALOG UNIT

RDL RU-MX5 MIXER w/ 1RU SHELF

SENNHEISER SI1015 I/R RECEIVER, w/ GA1013-CC

SHURE DFR11EQ-5 DIGITAL EQUALIZER

1RU VENT PANEL

STEWART CVA7400 POWER AMPLIFIER

1RU BLANK

QUANTUM TECHNOLOGIES QTI1511 POWER DISTRIBUTION MODULE

AMX AXCENT3 PRO, INTEGRATED ACCESS CONTROLLER

EXTRON DVS-150 VIDEO SCALER

EXTRON SW6 RGBHVA AUDIO/VIDEO SWITCHER

1RU BLANK PANEL

ALTINEX DA1506 DISTRIBUTION AMPLIFIER (x2)

4RU VENT PANEL

4RU VENT PANEL

ALTAS WA100-70B EQUIPMENT RACK w/ CS-HDPR CASTER

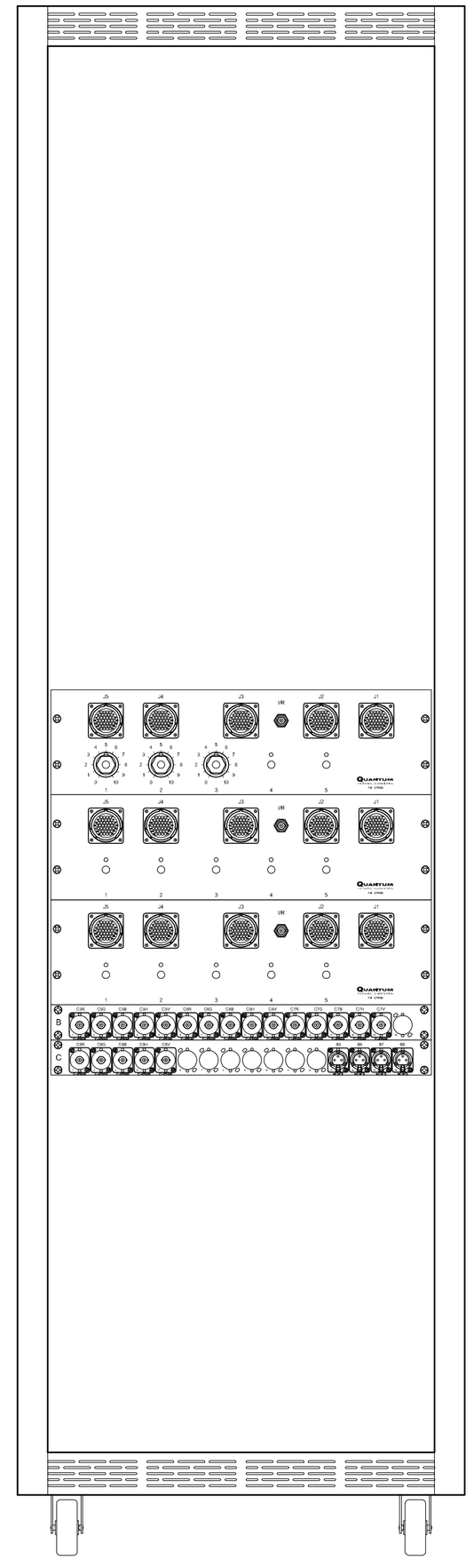

QUANTUM TECHNOLOGIES QTI1950 MULT PANEL w/ ATTENUATORS

QUANTUM TECHNOLOGIES QTI1950 MULT PANEL

QUANTUM TECHNOLOGIES QTI1950 MULT PANEL

MIDDLE ATLANTIC UNI-1 PANEL

MIDDLE ATLANTIC UNI-1 PANEL

ALTAS WA100-70B EQUIPMENT RACK w/ CS-HDPR CASTER

DRAWING LIST

COR0102
- SHEET 1 - RACK ELEVATIONS
- SHEET 2 - A/V BLOCK DIAGRAMS
- SHEET 3 - AUDIO SYSTEM, CALL DETAIL
- SHEET 4 - CONTROL, VIDEO I/O

AS BUILT

DFTSMN: M.JENNINGS 03-08-10	DWG NO: COR0102	QUANTUM TECHNOLOGIES, INC.
DESIGN:		
AUD ENGR: C.SNODDY 03-08-10		
VID ENGR: D.McCULLOUGH 03-08-10	CAD FILE REF: CRT-COR0102-223D	A/V SYSTEM JUDGE SCHMIDT COURTROOM 223D CORPUS CHRISTI, TX
MCH ENGR:		
MFG:		
PLOT: Jul 25, 2011 - 1:26pm By: mjennings	SIZE: D	SCALE: / CHARGE NO.: CTXH02 / SHEET 1 OF 5

As Built Drawings

DWG NO.	CDR0101	SH 2

ZONE	REV	REVISIONS	DATE	APPROVAL

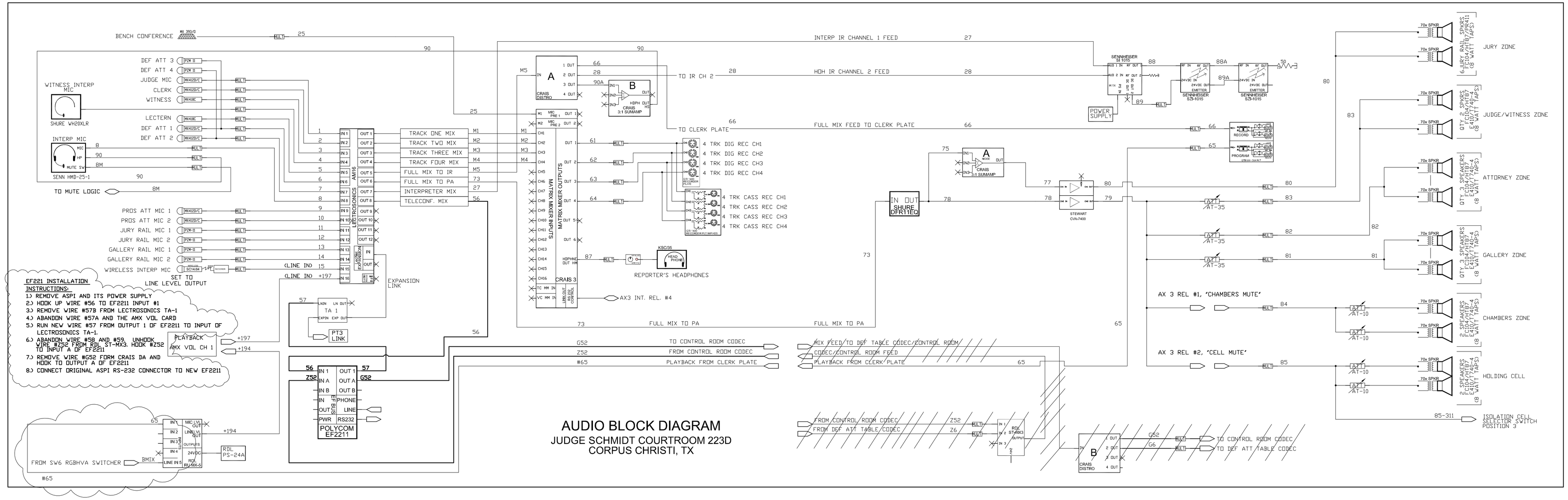

AUDIO BLOCK DIAGRAM

JUDGE SCHMIDT COURTROOM 223D
CORPUS CHRISTI, TX

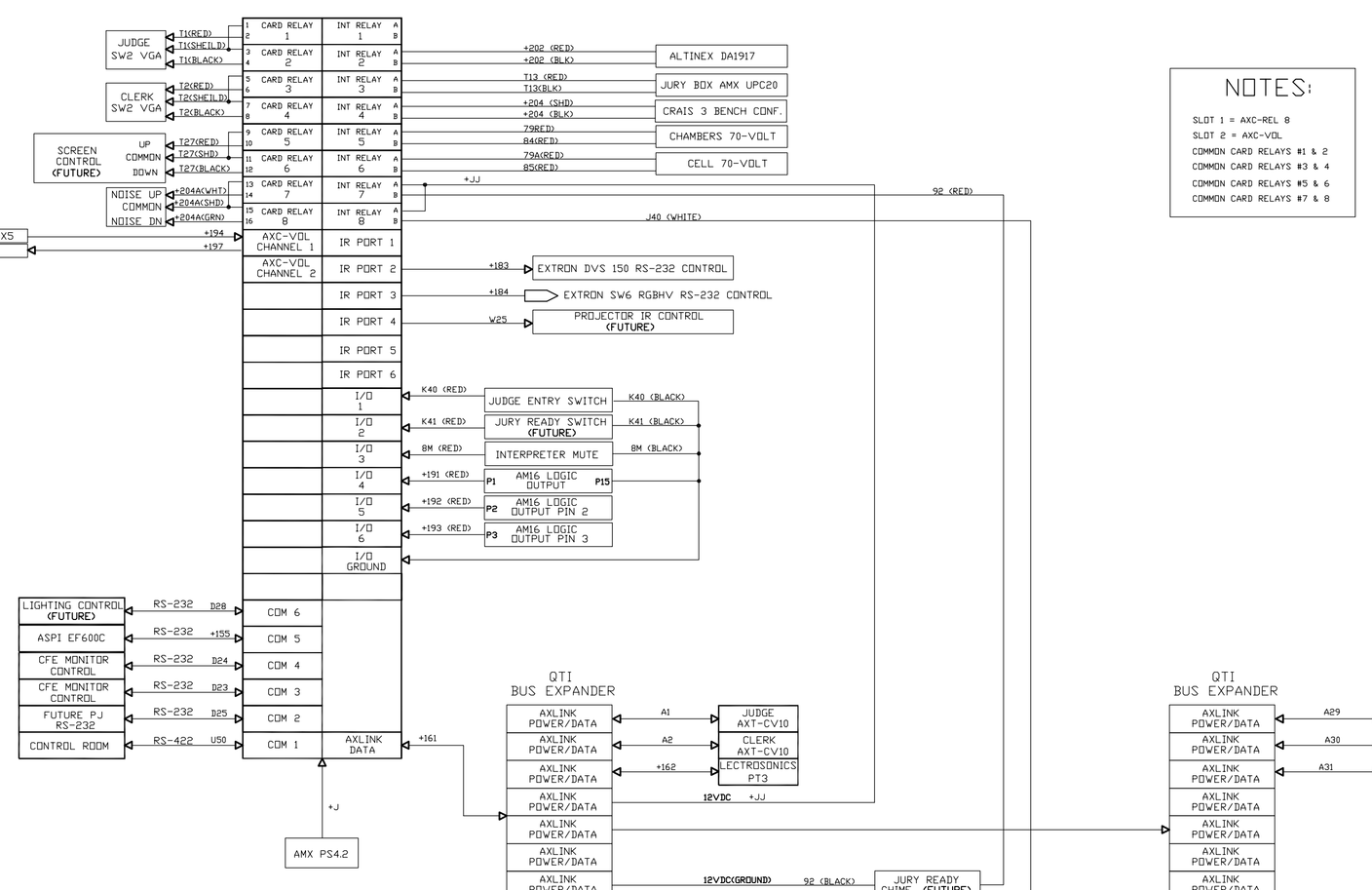

NOTES:

SLOT 1 = AXC-REL 8
SLOT 2 = AXC-VOL
COMMON CARD RELAYS #1 & 2
COMMON CARD RELAYS #3 & 4
COMMON CARD RELAYS #5 & 6
COMMON CARD RELAYS #7 & 8

DATA BLOCK DIAGRAM

JUDGE SCHMIDT COURTROOM 223D
CORPUS CHRISTI, TX

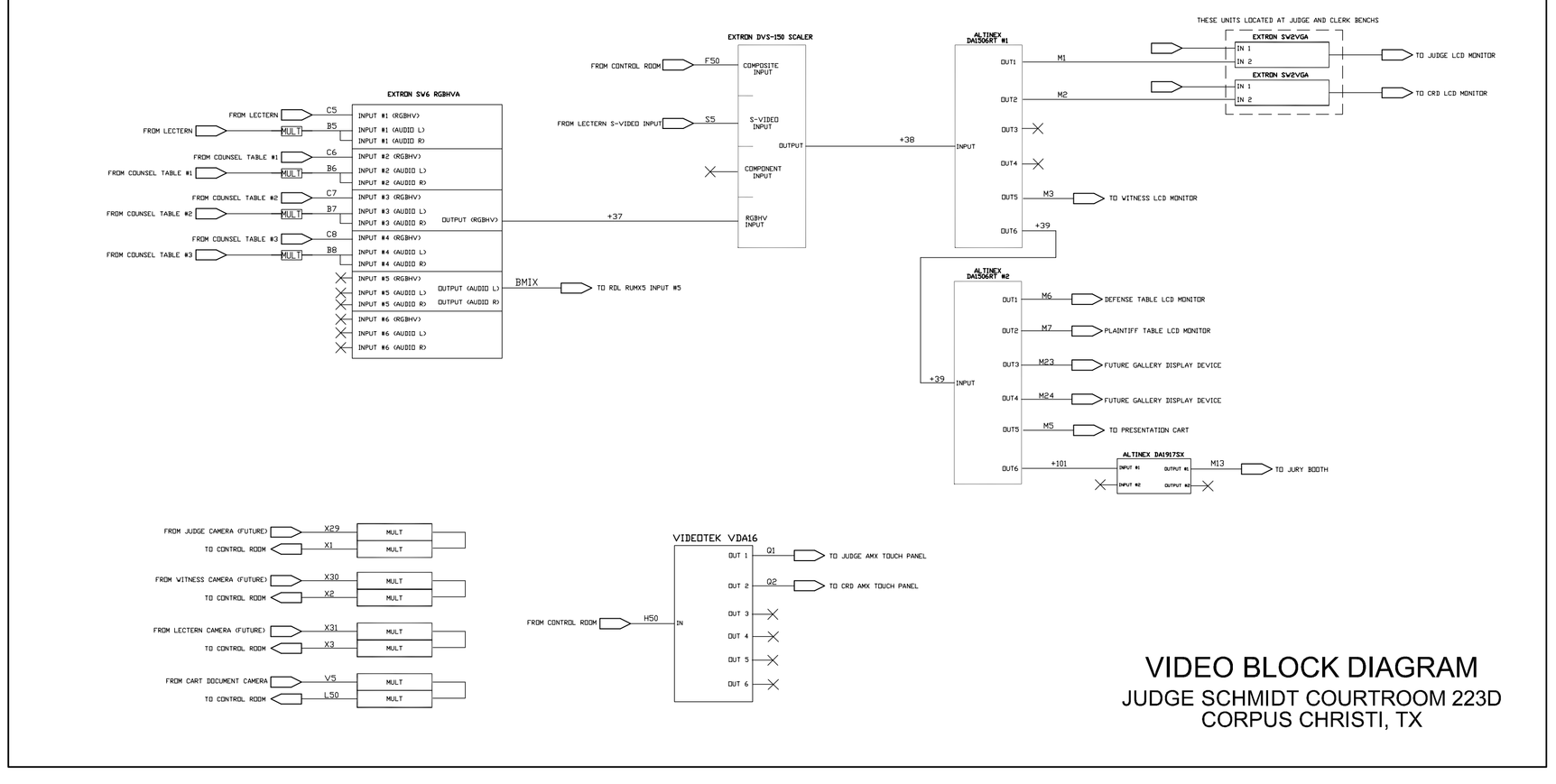

VIDEO BLOCK DIAGRAM

JUDGE SCHMIDT COURTROOM 223D
CORPUS CHRISTI, TX

QUANTUM TECHNOLOGIES, INC.

JUDGE SCHMIDT COURTROOM 223D
BLOCK DIAGRAMS

DRAWN BY DM/CS	SIZE D	CAD FILE REF: CRT-CDR0101-310D	DWG NO: CDR0101
DATE 03-08-10	SCALE:	PLOT: Jul 25, 2011 - 1:27pm By: mjennings	SHEET 2 OF 5

As Built Drawings

DWG NO.	COR0102	SH 3

ZONE	REV	REVISIONS	DATE	APPROVAL

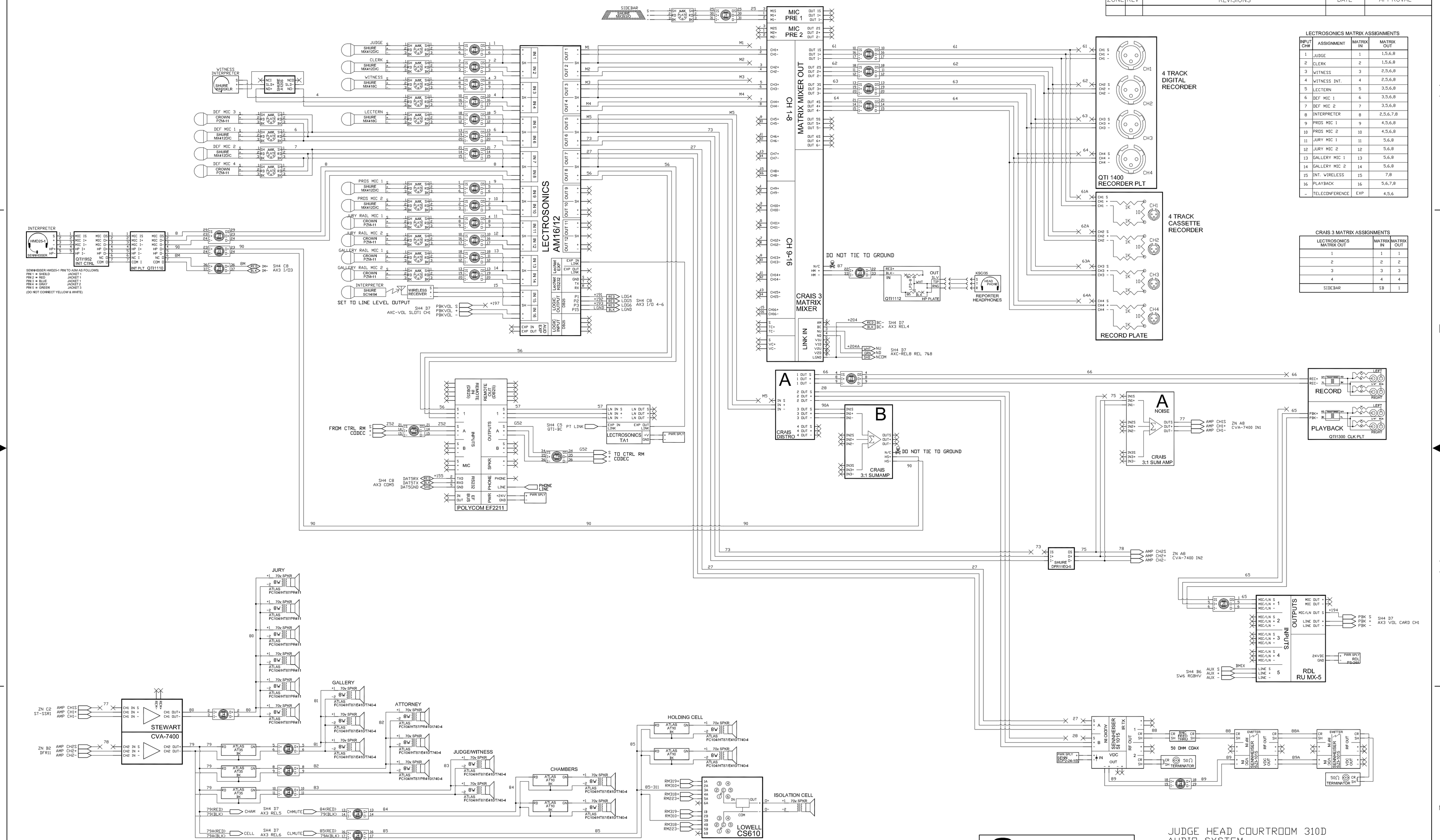

LECTROSONICS MATRIX ASSIGNMENTS

INPUT CH#	ASSIGNMENT	MATRIX IN	MATRIX OUT
1	JUDGE	1	1,5,6,8
2	CLERK	2	1,5,6,8
3	WITNESS	3	2,5,6,8
4	WITNESS INT.	4	2,5,6,8
5	LECTERN	5	3,5,6,8
6	DEF MIC 1	6	3,5,6,8
7	DEF MIC 2	7	3,5,6,8
8	INTERPRETER	8	2,5,6,7,8
9	PROS MIC 1	9	4,5,6,8
10	PROS MIC 2	10	4,5,6,8
11	JURY MIC 1	11	5,6,8
12	JURY MIC 2	12	5,6,8
13	GALLERY MIC 1	13	5,6,8
14	GALLERY MIC 2	14	5,6,8
15	INT. WIRELESS	15	7,8
16	PLAYBACK	16	5,6,7,8
-	TELECONFERENCE	EXP	4,5,6

CRAIS 3 MATRIX ASSIGNMENTS

LECTROSONICS MATRIX OUT	MATRIX IN	MATRIX OUT
1	1	1
2	2	2
3	3	3
4	4	4
SIDEBAR	SB	1

QUANTUM TECHNOLOGIES, INC.

DRAWN BY M.JENNINGS

DATE 03-08-10

JUDGE HEAD COURTROOM 310D
AUDIO SYSTEM

SIZE	CAD FILE REF:	DWG NO:
D	CRT-COR0102-223D	COR0102
SCALE:	PLOT: Jul 25, 2011 - 1:27pm By: mjennings	SHEET 3 OF 5

DWG NO.	COR0102	SH 4

ZONE	REV.	REVISIONS	DATE	APPROVAL

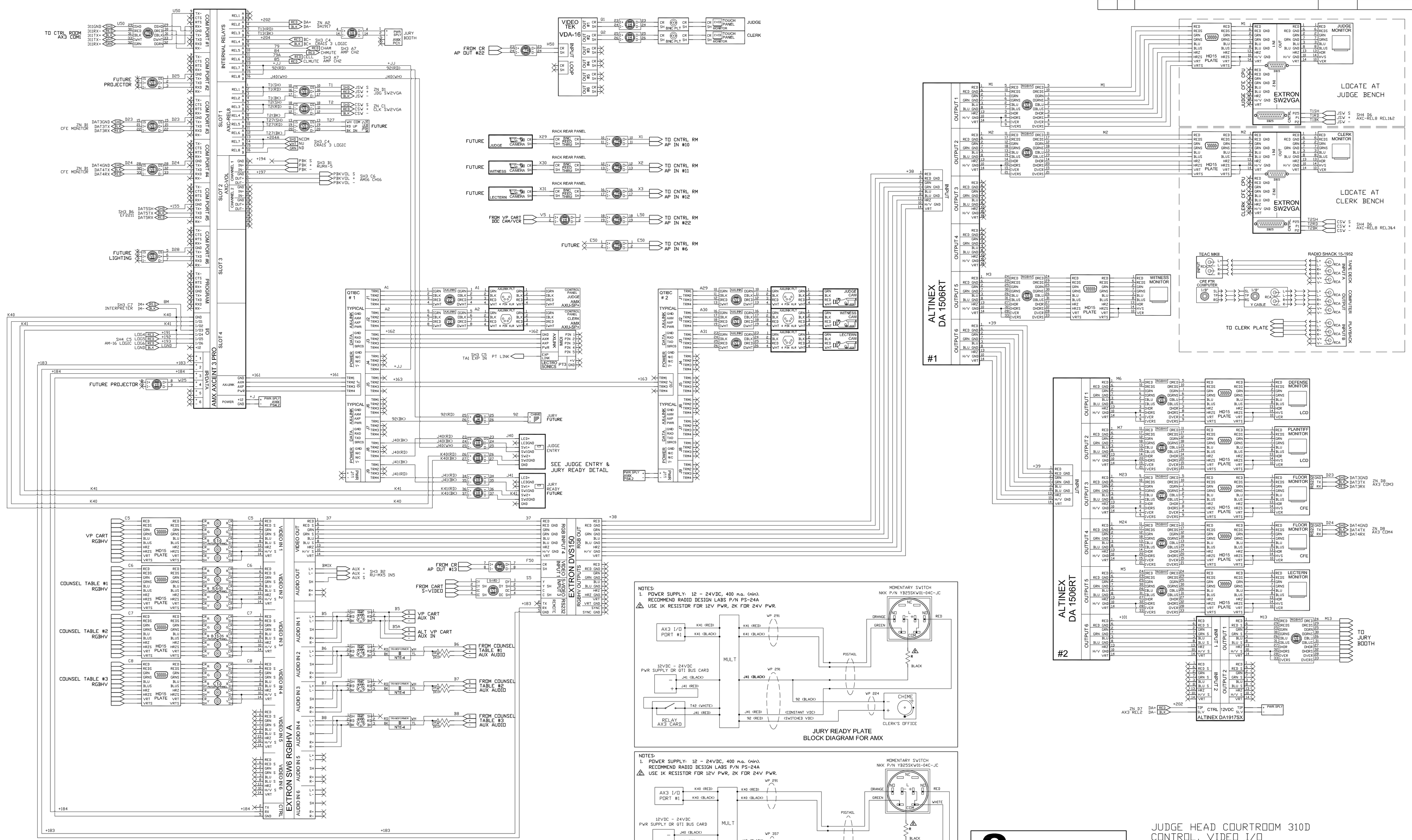

QUANTUM TECHNOLOGIES, INC.

DRAWN BY M.JENNINGS

DATE 03-08-10

JUDGE HEAD COURTROOM 310D
CONTROL, VIDEO I/O

SIZE	CAD FILE REF:	DWG NO:
D	CRT-COR0102-223D	COR0102
SCALE:	PLOT: Jul 25, 2011 - 1:27pm By: mjennings	SHEET 4 OF 5

DWG NO.	SH
COR521	1

ZONE	REV	REVISIONS	DATE	APPROVAL

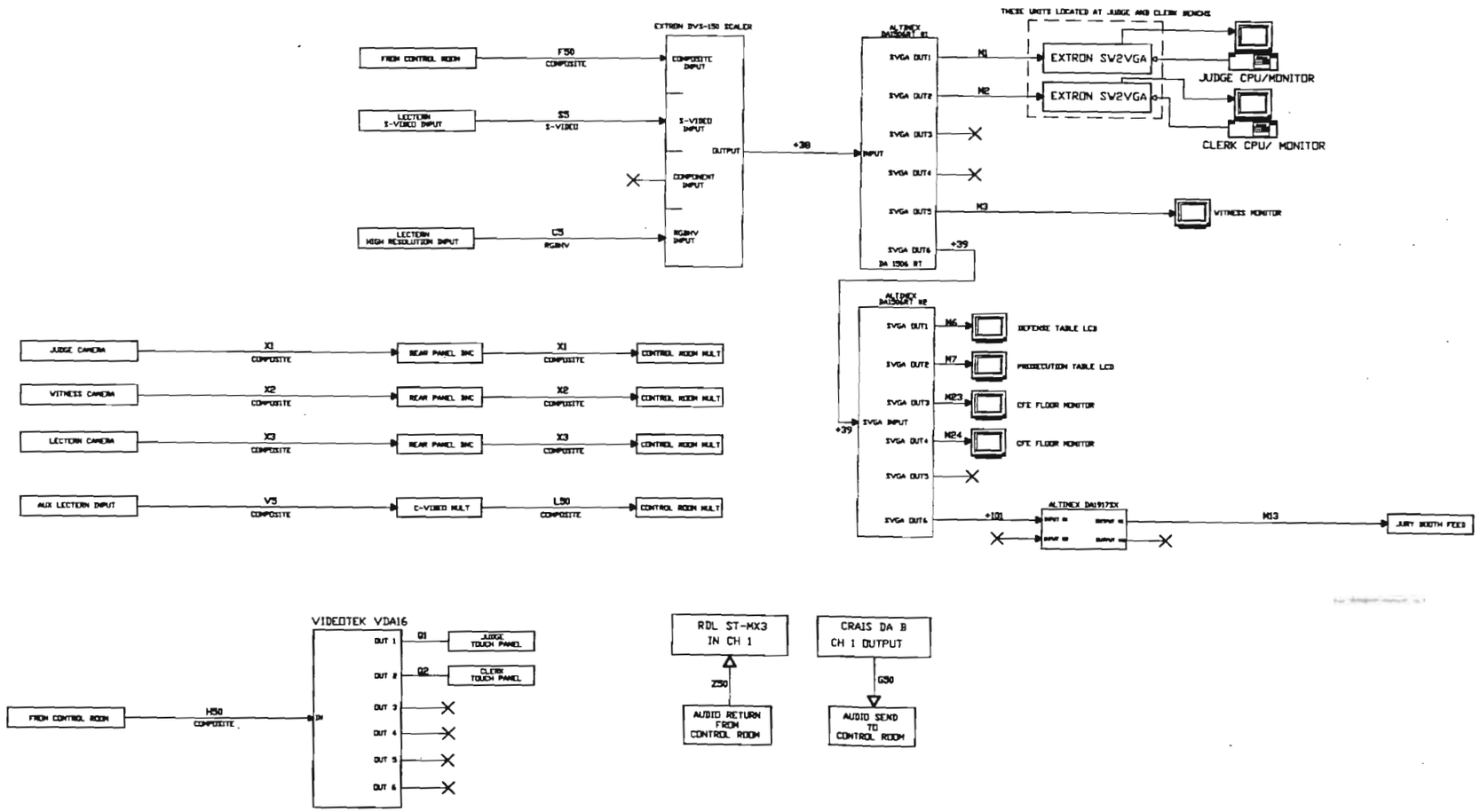

PLOT: Jan 04, 2002 - 2:16pm

AS BUILT VIDEO BLOCK DIAGRAM

UNLESS OTHERWISE SPECIFIED		
INTERPRET PER DOD-STD-100	DIMENSIONAL TOLERANCES ON OPER ANSI Y14.5D	
THREADS PER ANSI Y14.6	MILLIMETERS: XX ± ___ XXX± ___	DECIMALS: XX ± 0.01 XXX± 0.008 ANGLES
REMOVE ALL BURRS AND BREAK ALL SHARP EDGES	MATERIAL	
IDENTIFY BY BAG & OR TAG PER MIL-STD-130	FINISH	
SURFACE FINISH 125		

DFTSMN	B McCULLOUGH	01-04-02
DSGN		
AUD ENGR	C BARRY	01-04-02
VID ENGR	B McCULLOUGH	01-04-02
MCH ENGR		
MFG		
CONTRACT NO.		
DESIGN APPROVAL		
OTHER APPROVAL		

QUANTUM TECHNOLOGIES, INC.

VIDEO SYSTEM
BANKRUPTCY COURTROOM 223D
CORPUS CHRISTI, TX

SIZE	CAD FILE REF:	DWG NO:
B	COR120BR	COR521
SCALE	UNIT WT	SHEET 1 OF 6

As Built Drawings

DWG NO	SH
COR521	2

ZONE	REV	REVISIONS	DATE	APPROVAL

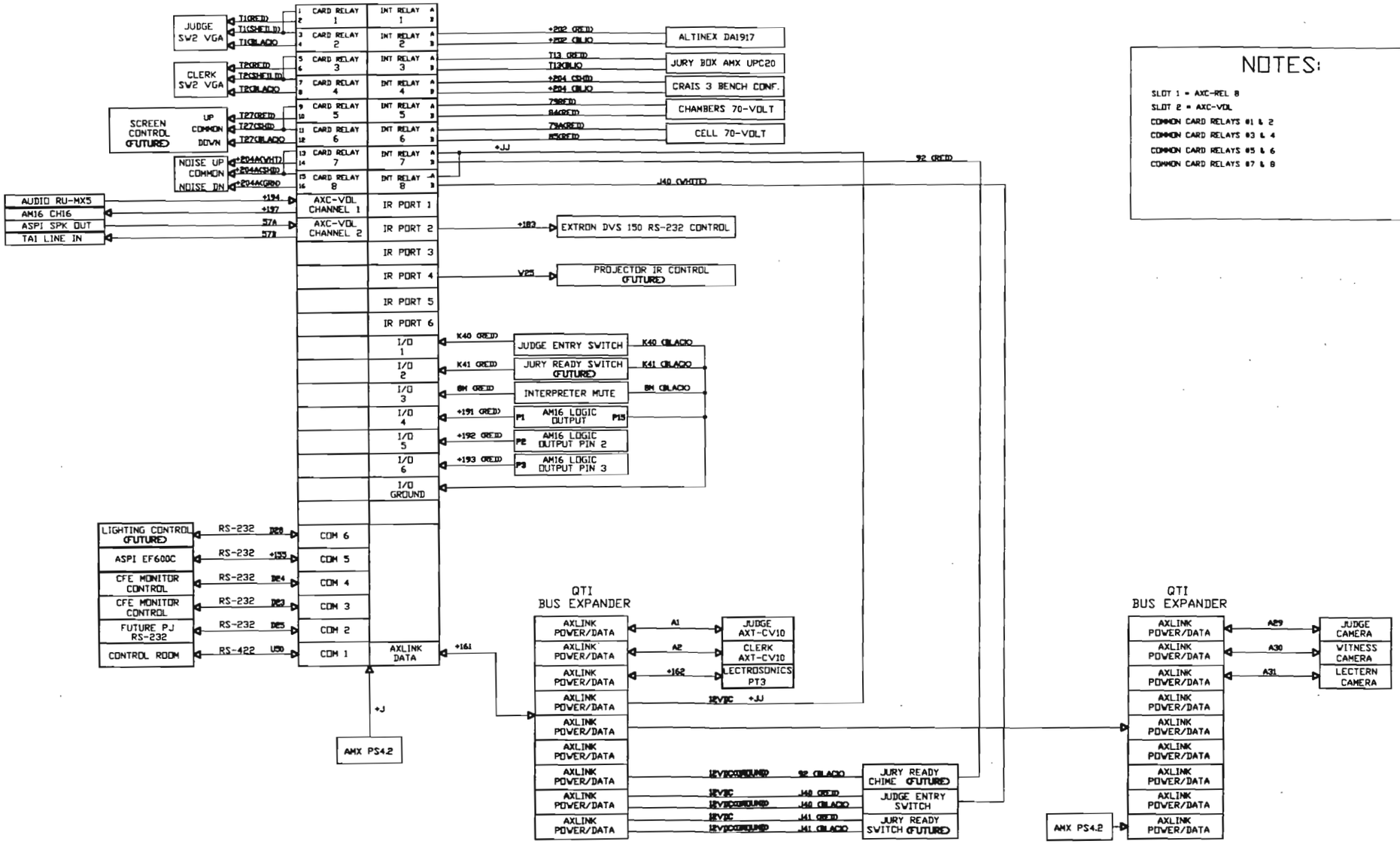

NOTES:

SLOT 1 = AXC-REL 8
SLOT 2 = AXC-VDL
COMMON CARD RELAYS #1 & 2
COMMON CARD RELAYS #3 & 4
COMMON CARD RELAYS #5 & 6
COMMON CARD RELAYS #7 & 8

As Built Drawings

PLOT: Jan 04, 2002 - 2:16pm

QUANTUM TECHNOLOGIES, INC.

DATA BLOCK DIAGRAM
BANKRUPTCY COURTROOM 223D

DRAWN BY D. McCULLOUGH	SIZE B	CAD FILE REF: COR120BR	DWG NO: COR521
DATE 01-04-02	SCALE	UNIT WT	SHEET 2 OF 6

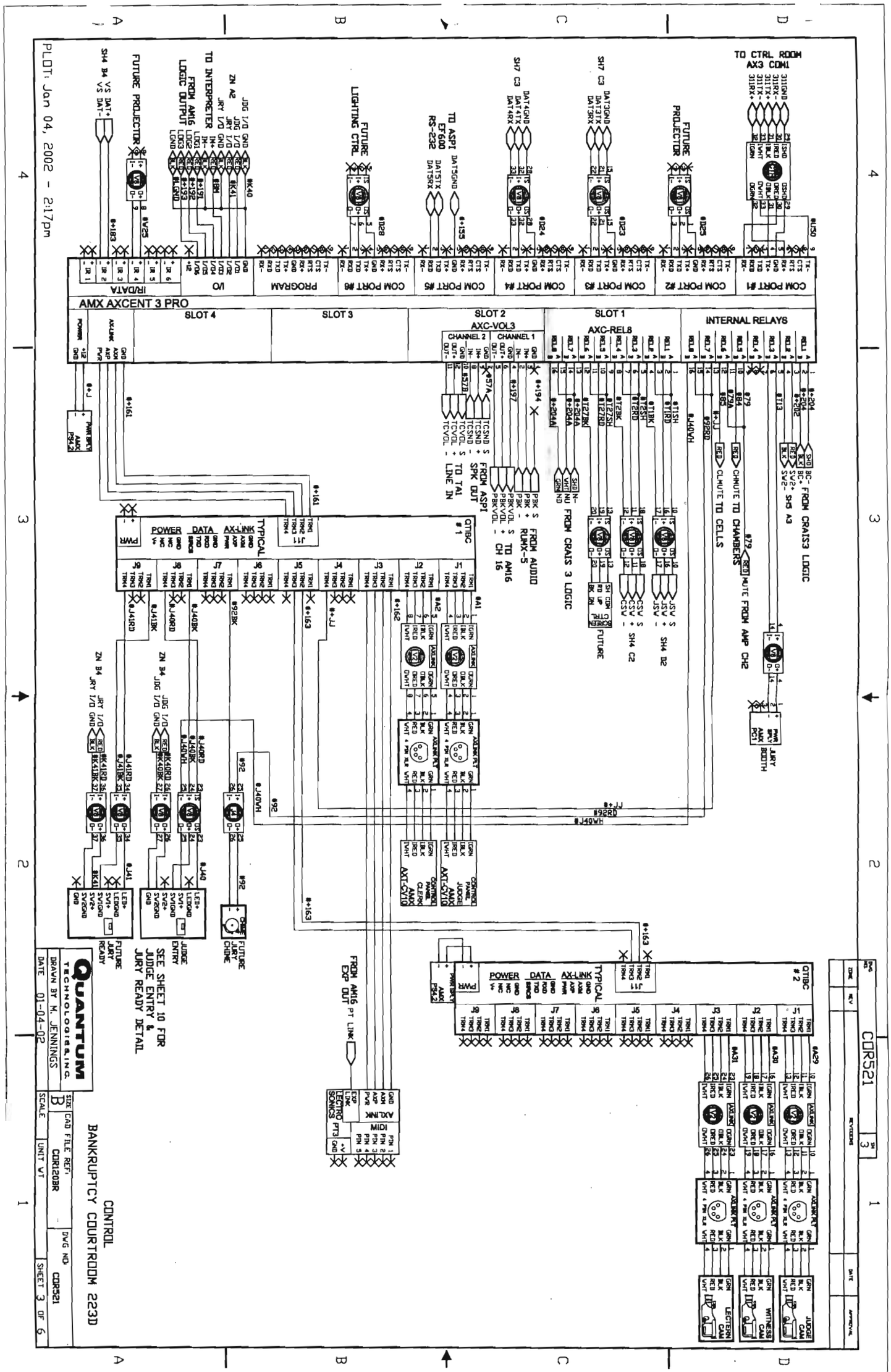
PLOT: Jan 04, 2002 - 2:17pm
TO CTRL ROOM AX3 COM1
FUTURE PROJECTOR
TO INTERPRETER
FROM AM16 LOGIC OUTPUT
FUTURE LIGHTING CTRL
TO ASP1 EF600 RS-232
COM PORT #1
COM PORT #2
COM PORT #3
COM PORT #4
COM PORT #5
COM PORT #6
PROGRAM
I/O
IR/DATA
AMX AXCENT 3 PRO
SLOT 4
SLOT 3
SLOT 2
AXC-VOL3
SLOT 1
AXC-REL8
INTERNAL RELAYS
FROM CRA153 LOGIC
CHUTE TO CHAMBERS
MUTE FROM AMP CH2
CLMUTE TO CELLS
FROM CRA13 3 LOGIC
FROM AUDIO RUMX-5
TO AM16 CH 16
FROM ASP1 SPK OUT
TO TA1 LINE IN
QTBC #1
QTBC #2
TYPICAL
POWER
DATA
AX-LINK
FROM AM16 EXP OUT
SEE SHEET 10 FOR JUDGE ENTRY & JURY READY DETAIL
FUTURE JURY READY
FUTURE JURY CHIME
JURY BOOTH
QUANTUM TECHNOLOGIES, INC.
DRAWN BY M. JENNINGS
DATE 01-04-02
SIZE B
CAD FILE REF: CDR120BR
DWG NO CDR521
SCALE
UNIT VT
SHEET 3 OF 6
CONTROL
BANKRUPTCY COURTROOM 223D
CDR521

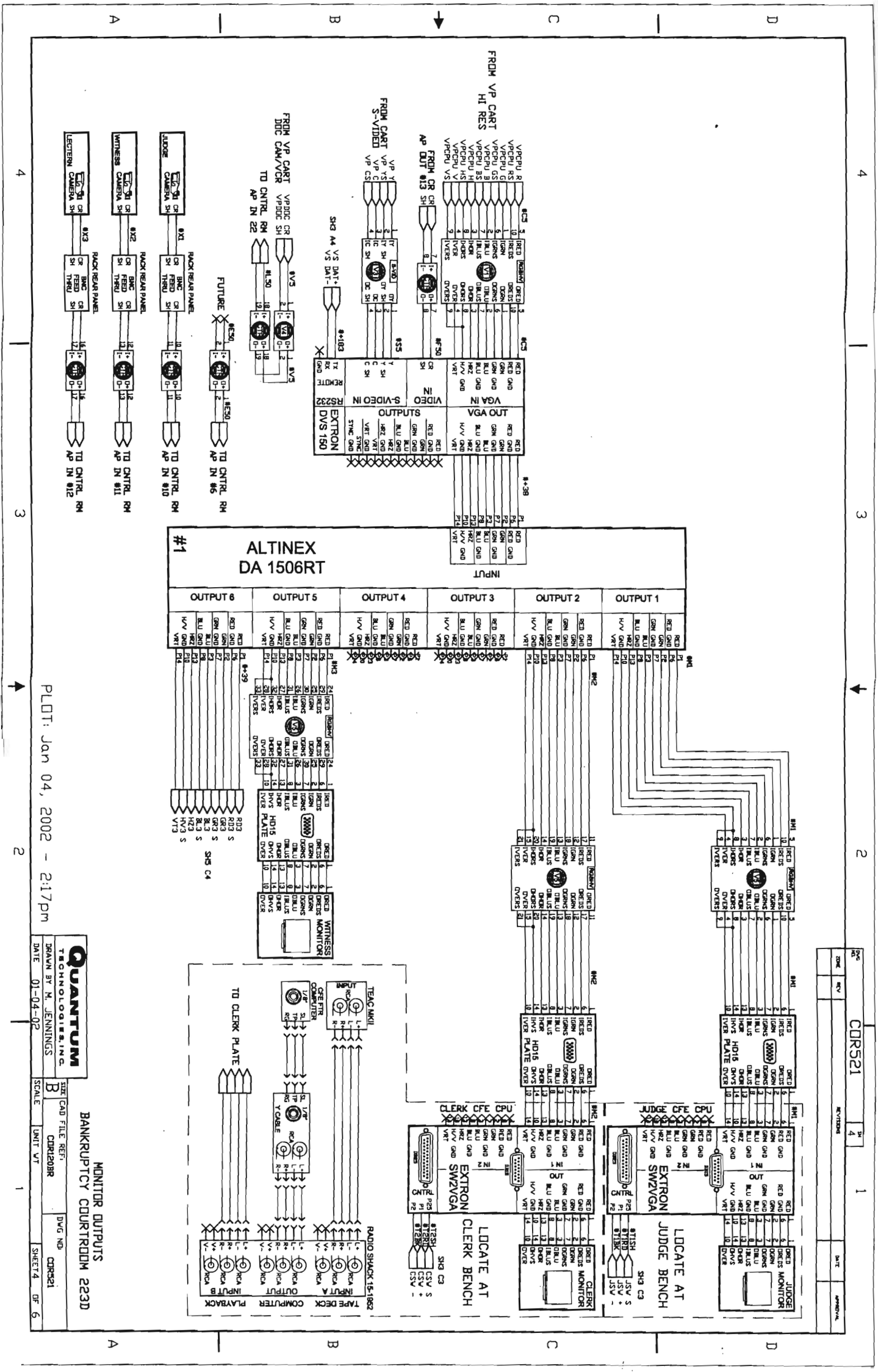
MONITOR OUTPUTS
BANKRUPTCY COURTROOM 223D
QUANTUM TECHNOLOGIES, INC.
DRAWN BY M. JENNINGS
DATE 01-04-02
CAD FILE REF: CDR120BR
DWG NO: CDR521
SHEET 4 OF 6
PLOT: Jan 04, 2002 - 2:17pm
CDR521
ALTINEX DA 1506RT
EXTRON DVS 150
EXTRON SW2VGA
LOCATE AT CLERK BENCH
LOCATE AT JUDGE BENCH
CLERK CFE CPU
JUDGE CFE CPU
TAPE DECK
COMPUTER
PLAYBACK
RACK REAR PANEL
TO CLERK PLATE
FROM VP CART HI RES
FROM CART S-VIDEO
FROM CR AP OUT #13
FROM VP CART DOC CAM/VCR
TO CNTRL RM AP IN 22
FUTURE
TO CNTRL RM AP IN #12
TO CNTRL RM AP IN #11
TO CNTRL RM AP IN #10
TO CNTRL RM AP IN #6
LECTERN CAMERA
WITNESS CAMERA
JUDGE CAMERA
TEAC MKII
RADIO SHACK 15-1862
WITNESS MONITOR
CLERK MONITOR
JUDGE MONITOR
HD15 PLATE OVER

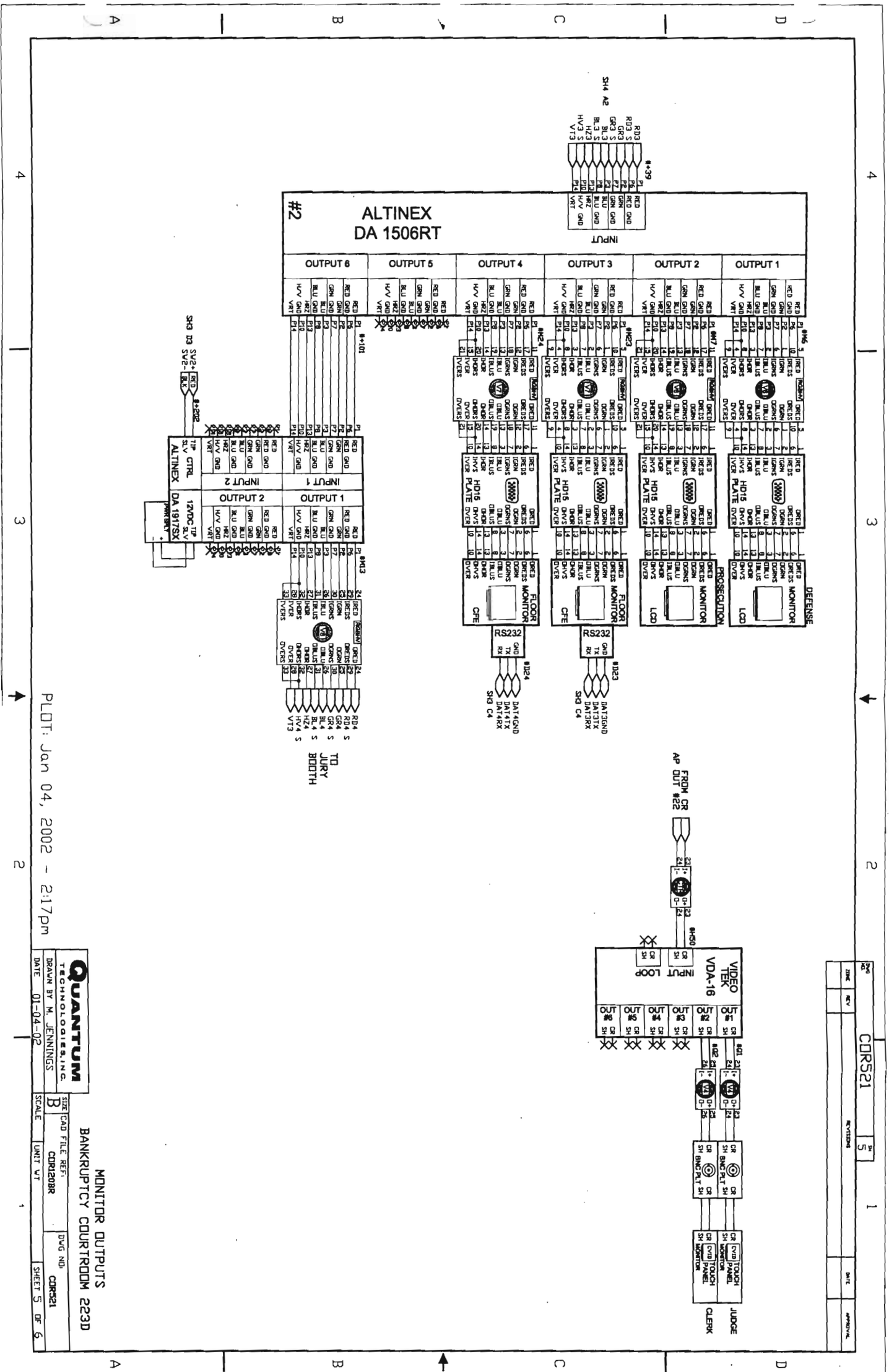
ALTINEX
DA 1506RT
#2
OUTPUT 6
OUTPUT 5
OUTPUT 4
OUTPUT 3
OUTPUT 2
OUTPUT 1
INPUT
DEFENSE MONITOR
PROSECUTION MONITOR
FLOOR MONITOR
HD15 PLATE
LCD
CFE
RS232
TO JURY BOOTH
ALTINEX DA 1917SX
INPUT 1
INPUT 2
12VDC TIP SLV
TIP CTRL SLV
FROM CR AP OUT #22
VIDEO TEK VDA-16
INPUT
LOOP
OUT #1
OUT #2
OUT #3
OUT #4
OUT #5
OUT #6
BNC PLT
TOUCH PANEL
MONITOR
JUDGE
CLERK
PLOT: Jan 04, 2002 - 2:17pm
QUANTUM TECHNOLOGIES, INC.
DRAWN BY M. JENNINGS
DATE 01-04-02
SIZE B
CAD FILE REF: CDR1208R
DWG NO: CDR521
SHEET 5 OF 6
SCALE
UNIT VT
MONITOR OUTPUTS
BANKRUPTCY COURTROOM 223D
CDR521
REVISIONS
DATE
APPROVAL

As Built Drawings

DWG NO	COR521	SH 6

ZONE	REV	REVISIONS	DATE	APPROVAL

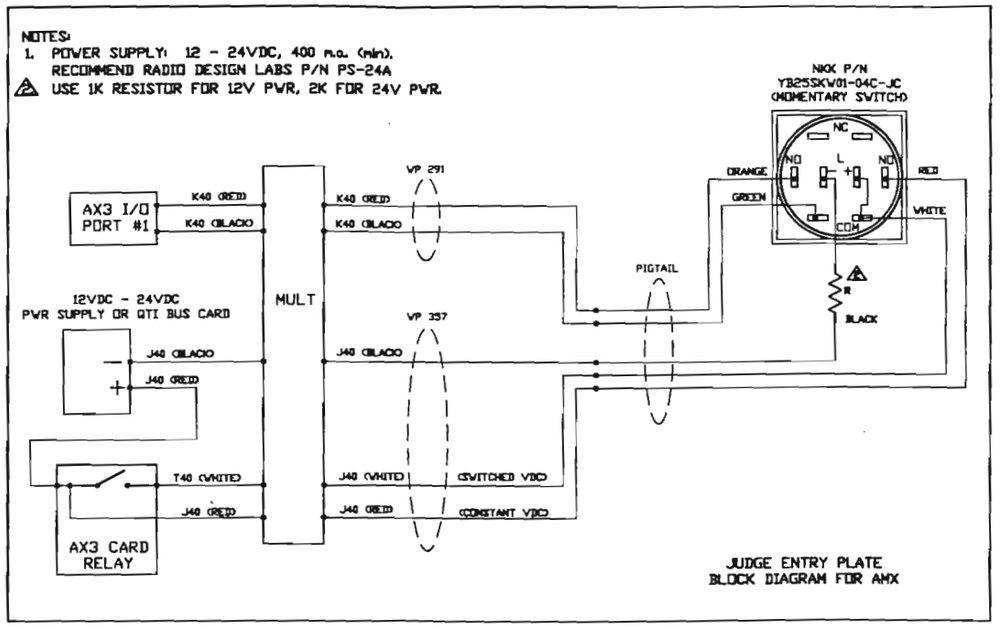

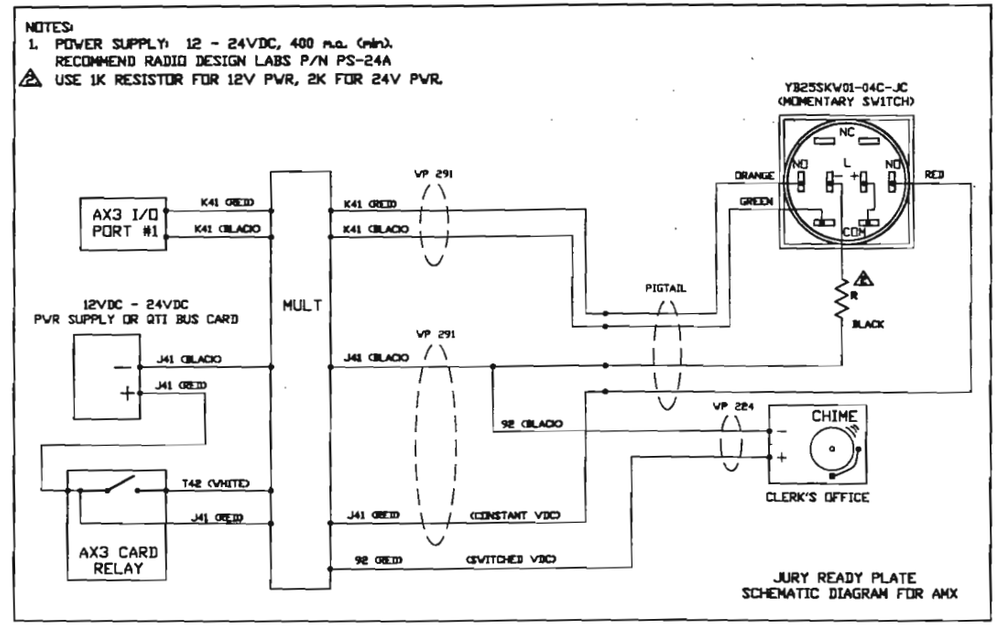

PLOT: Jan 04, 2002 - 2:17pm

QUANTUM TECHNOLOGIES, INC.

CALL SYSTEMS DETAIL
BANKRUPTCY COURTROOM 223D

DRAWN BY M. JENNINGS	SIZE B	CAD FILE REF: COR120BR	DWG NO: COR521
DATE 01-04-02	SCALE	UNIT VT	SHEET 6 OF 6